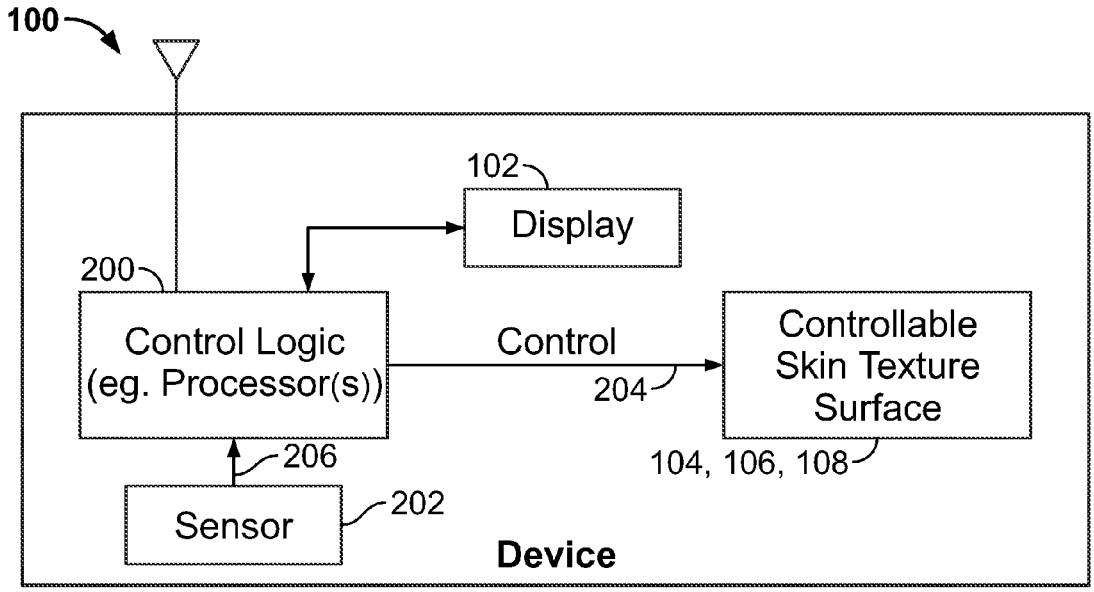
100
102
Display
200
Control Logic
(eg. Processor(s))
Control
204
Controllable
Skin Texture
Surface
104, 106, 108
206
Sensor
202
Device

FIG. 2

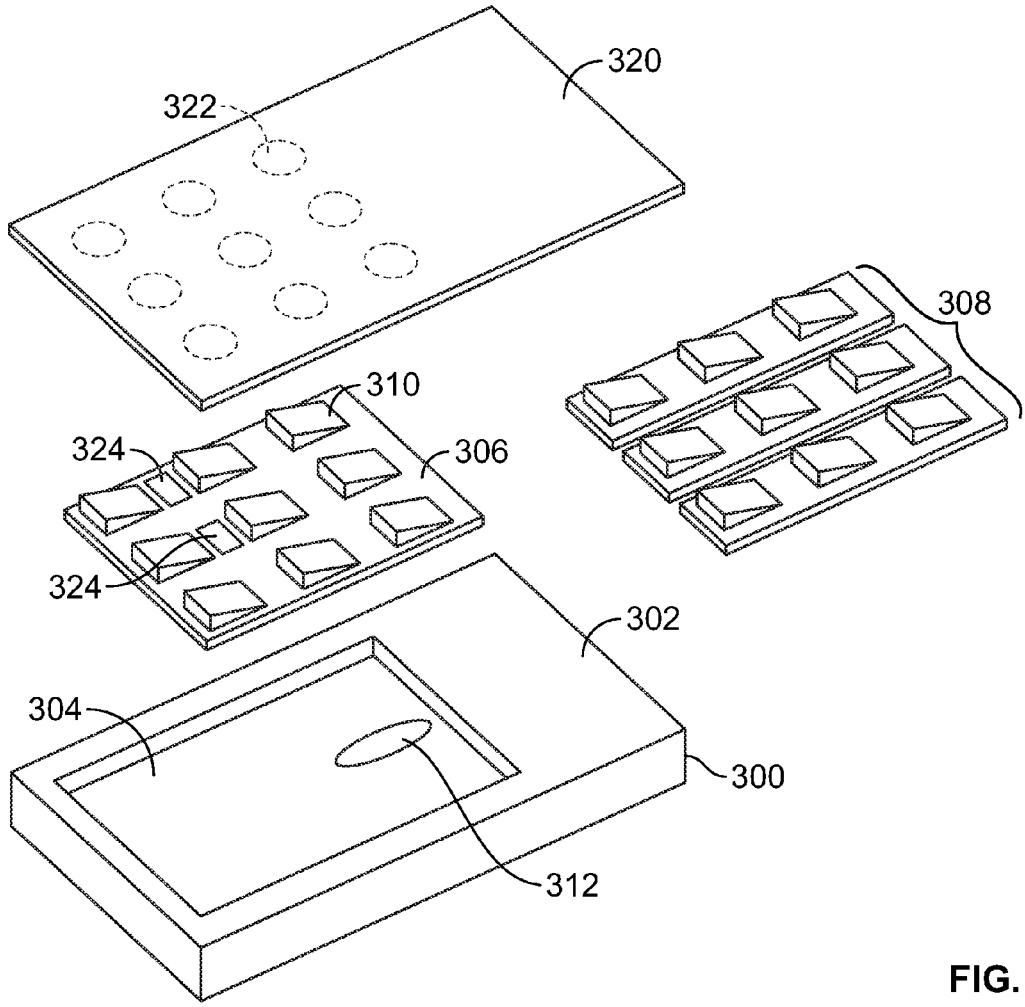
320
322
308
310
324
306
324
302
304
300
312

FIG. 3