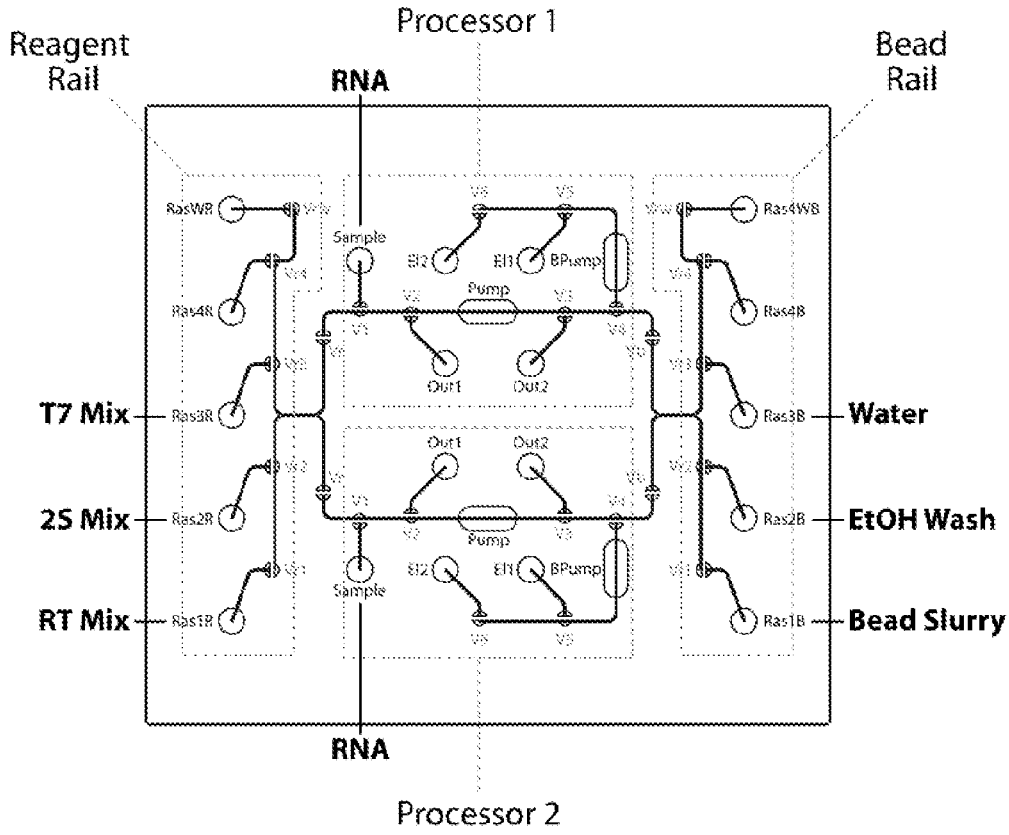
Processor 1
Reagent Rail
Bead Rail
RNA
Sample
Pump
Out1
Out2
T7 Mix
25 Mix
RT Mix
Water
EtOH Wash
Bead Slurry
RNA
Processor 2

Figure 19