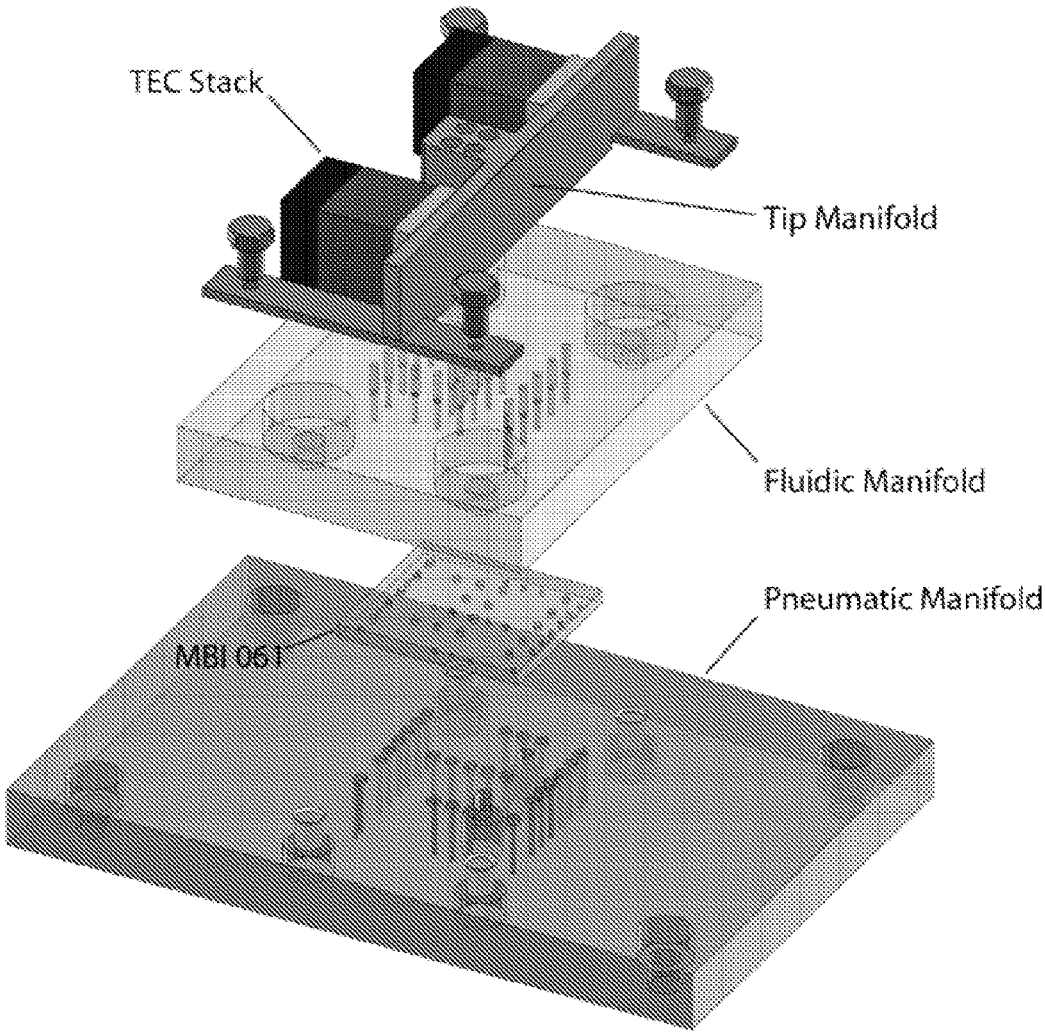
TEC Stack
Tip Manifold
Fluidic Manifold
Pneumatic Manifold
MBI 061

Figure 13