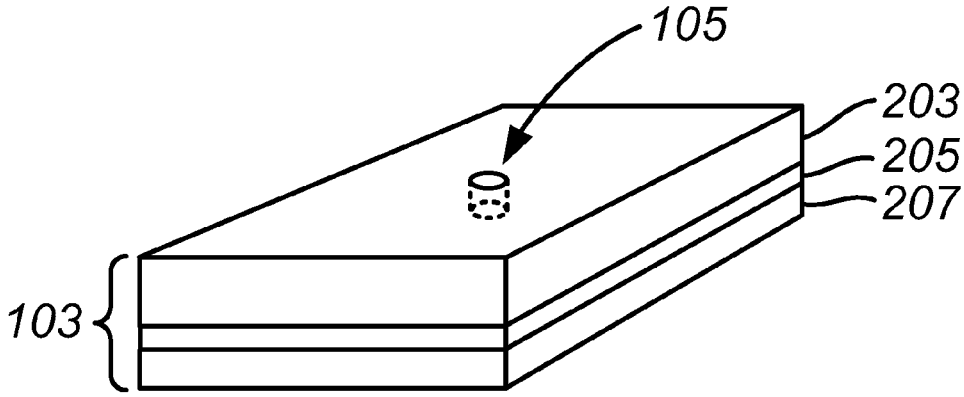

Figure 14

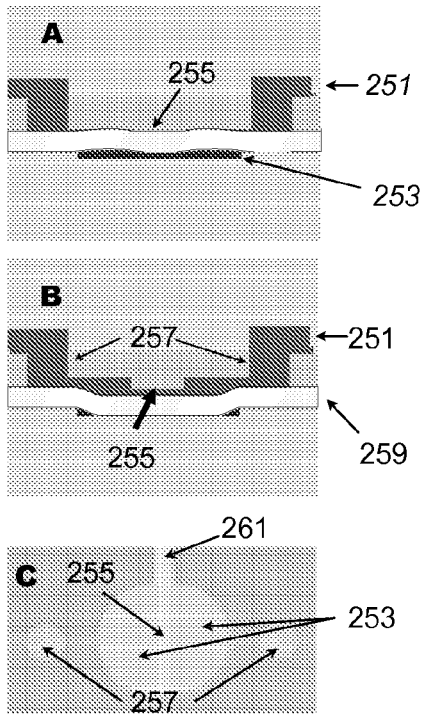

Figure 15