US 20170091436A1

(19) United States

(12) Patent Application Publication

(10) Pub. No.: US 2017/0091436 A1

(43) Pub. Date: Mar. 30, 2017

Cao et al.

(54) INPUT DEVICES INCORPORATING BIOMETRIC SENSORS

(71) Applicant: **Apple Inc.**, Cupertino, CA (US)

(72) Inventors: **Robert Y. Cao**, Cupertino, CA (US); **Michael K. McCord**, Cupertino, CA (US); **Simon R. Lancaster-Larocque**, San Jose, CA (US)

(21) Appl. No.: **15/239,977**

(22) Filed: **Aug. 18, 2016**

Related U.S. Application Data

(60) Provisional application No. 62/235,538, filed on Sep. 30, 2015.

Publication Classification

(51) **Int. Cl.**

G06F 21/32	(2006.01)
G06F 1/16	(2006.01)
G06K 9/00	(2006.01)

(52) **U.S. Cl.**

CPC ***G06F 21/32*** (2013.01); ***G06K 9/00087*** (2013.01); ***G06K 9/00013*** (2013.01); ***G06F 1/1616*** (2013.01); ***G06F 1/1637*** (2013.01); ***G06F 1/1662*** (2013.01); ***G06F 1/1681*** (2013.01); *G06F 3/02* (2013.01)

(57) **ABSTRACT**
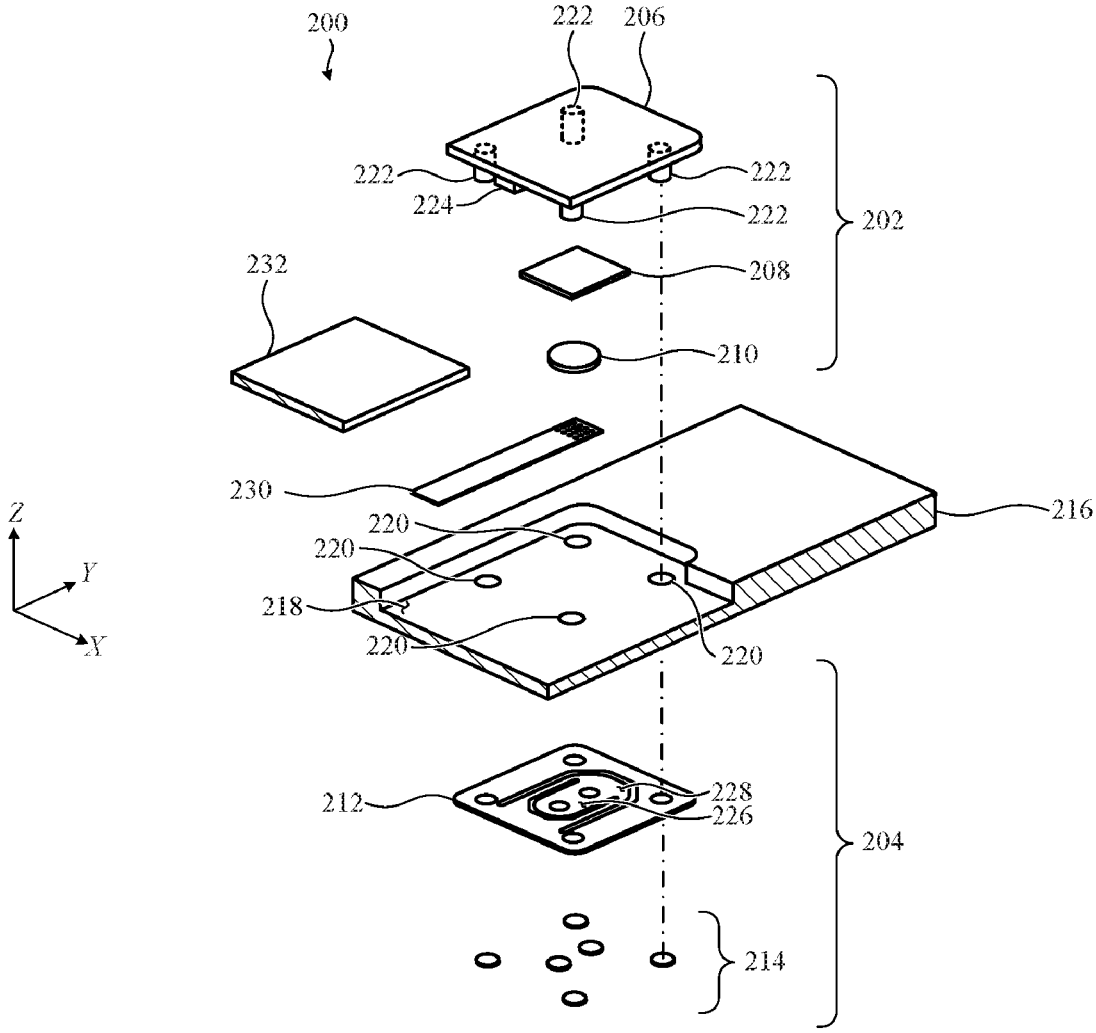
A button assembly for an electronic device is disclosed. The button assembly integrates a biometric sensor below a top surface of the button. The button assembly is positioned relative to a secondary display of an electronic device. The secondary display can be positioned relative to a keyboard, such as above a top row of keys of the keyboard.