FIG. 15

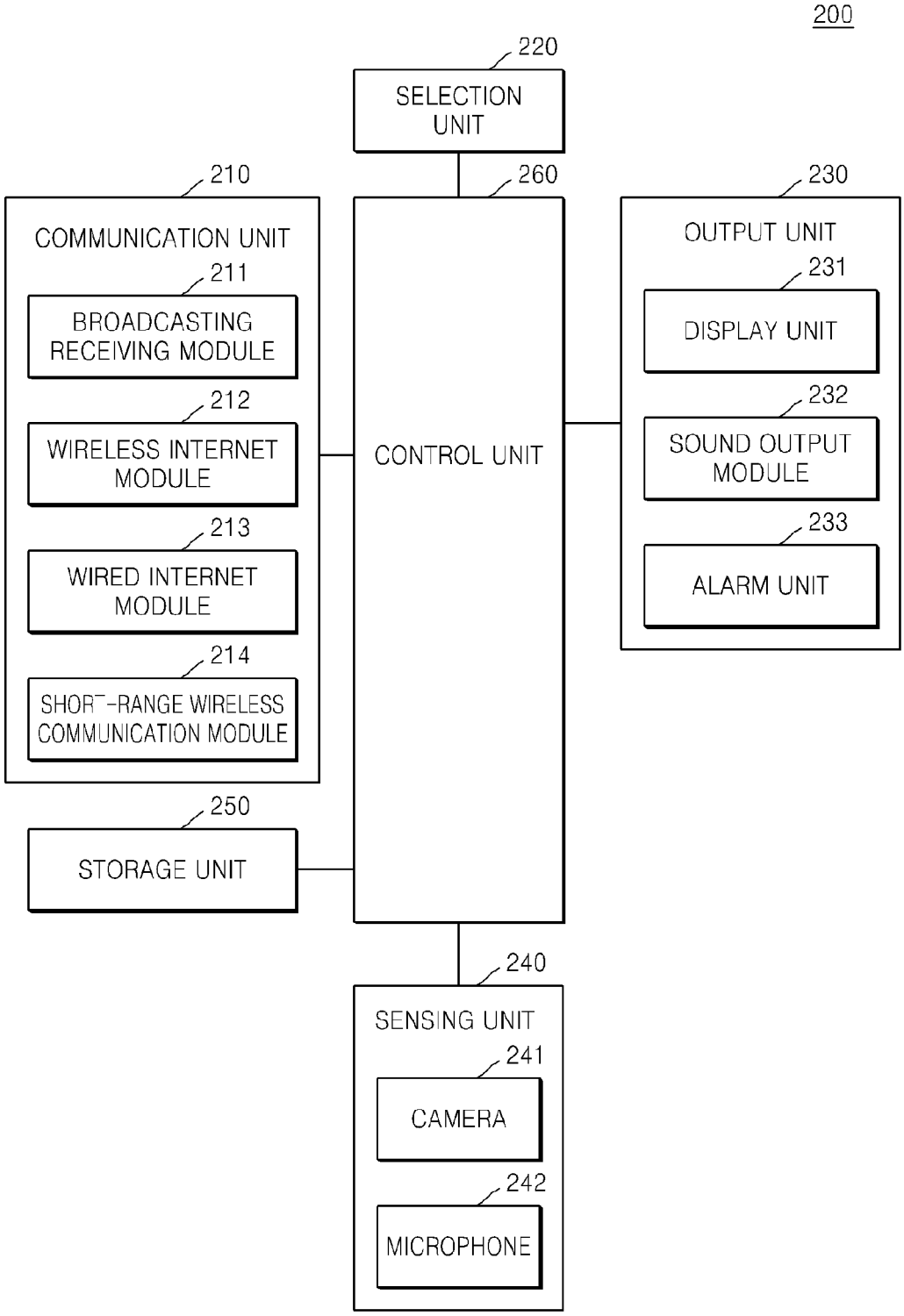
200
220
SELECTION UNIT
210
COMMUNICATION UNIT
211
BROADCASTING RECEIVING MODULE
212
WIRELESS INTERNET MODULE
213
WIRED INTERNET MODULE
214
SHORT-RANGE WIRELESS COMMUNICATION MODULE
250
STORAGE UNIT
260
CONTROL UNIT
230
OUTPUT UNIT
231
DISPLAY UNIT
232
SOUND OUTPUT MODULE
233
ALARM UNIT
240
SENSING UNIT
241
CAMERA
242
MICROPHONE