Fig.11

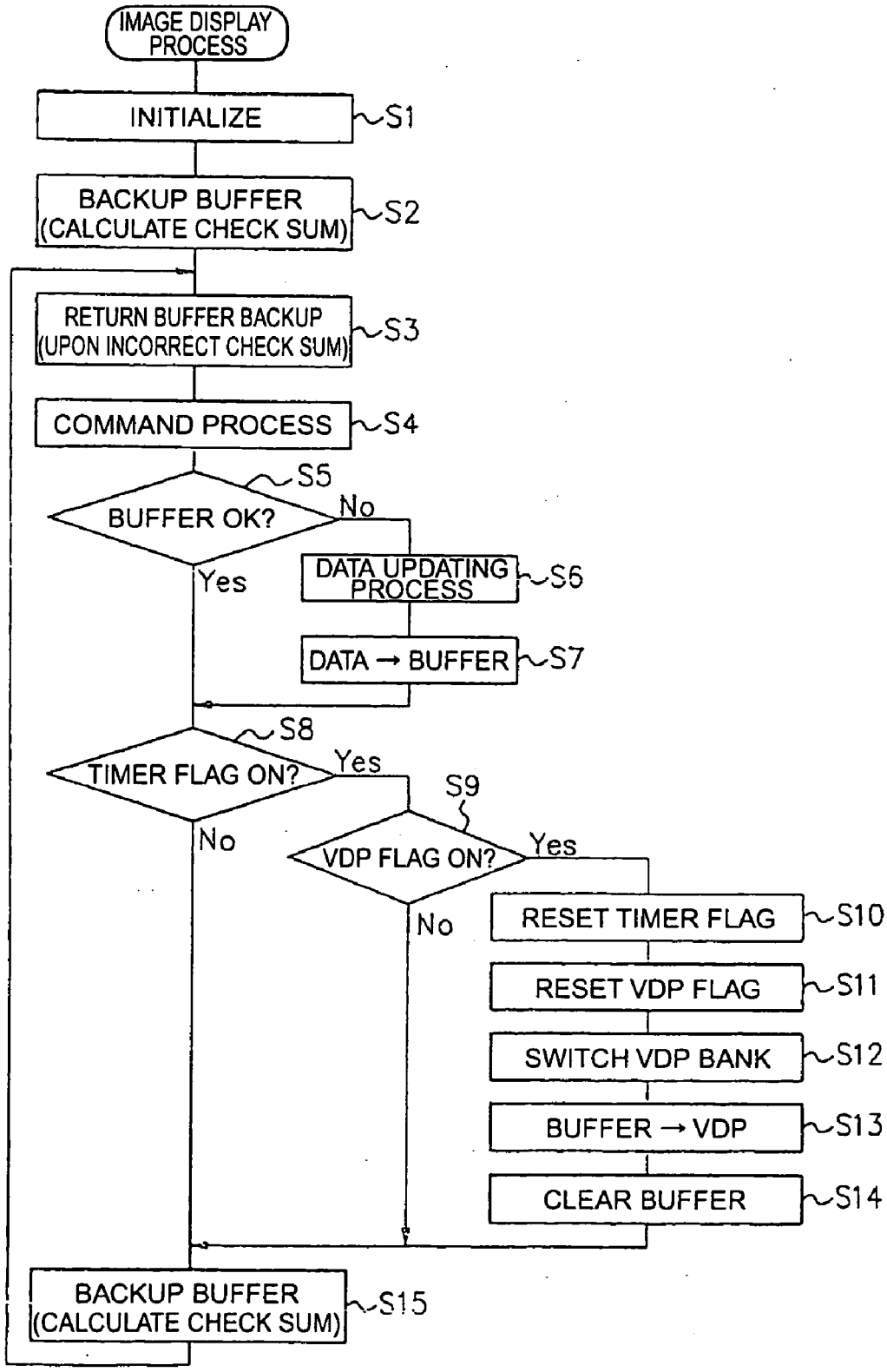
IMAGE DISPLAY PROCESS
INITIALIZE
S1
BACKUP BUFFER (CALCULATE CHECK SUM)
S2
RETURN BUFFER BACKUP (UPON INCORRECT CHECK SUM)
S3
COMMAND PROCESS
S4
S5
BUFFER OK?
No
Yes
DATA UPDATING PROCESS
S6
DATA → BUFFER
S7
S8
TIMER FLAG ON?
Yes
No
S9
VDP FLAG ON?
Yes
No
RESET TIMER FLAG
S10
RESET VDP FLAG
S11
SWITCH VDP BANK
S12
BUFFER → VDP
S13
CLEAR BUFFER
S14
BACKUP BUFFER (CALCULATE CHECK SUM)
S15