Fig.12

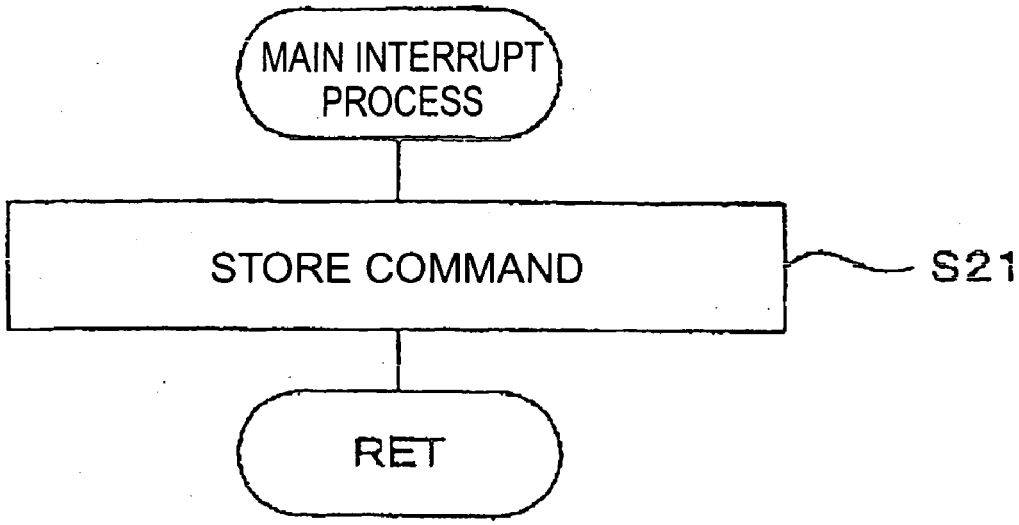
MAIN INTERRUPT PROCESS
STORE COMMAND
S21
RET

Fig.13

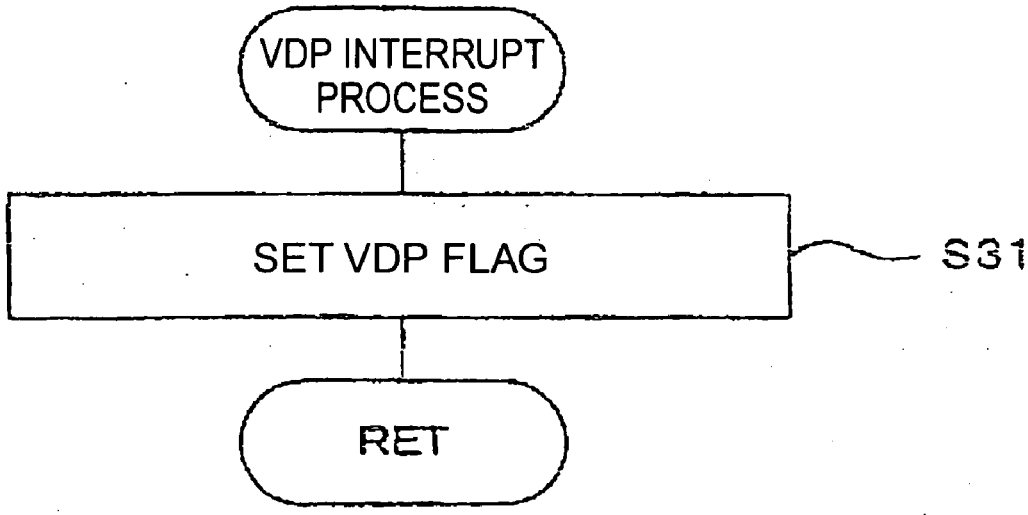
VDP INTERRUPT PROCESS
SET VDP FLAG
S31
RET