Fig.8

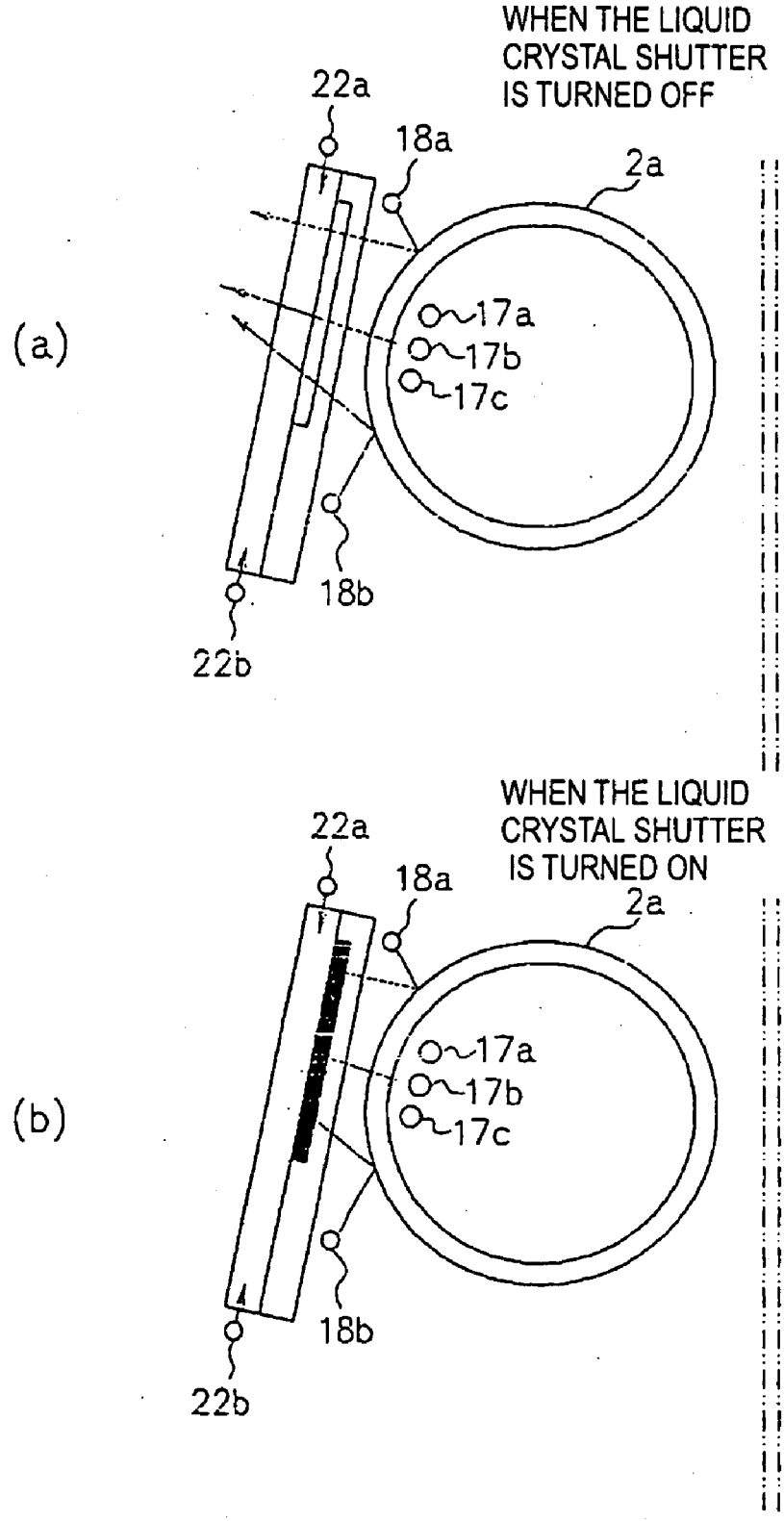
WHEN THE LIQUID CRYSTAL SHUTTER IS TURNED OFF
22a
18a
2a
(a)
17a
17b
17c
18b
22b
WHEN THE LIQUID CRYSTAL SHUTTER IS TURNED ON
22a
18a
2a
(b)
17a
17b
17c
18b
22b