Fig.10

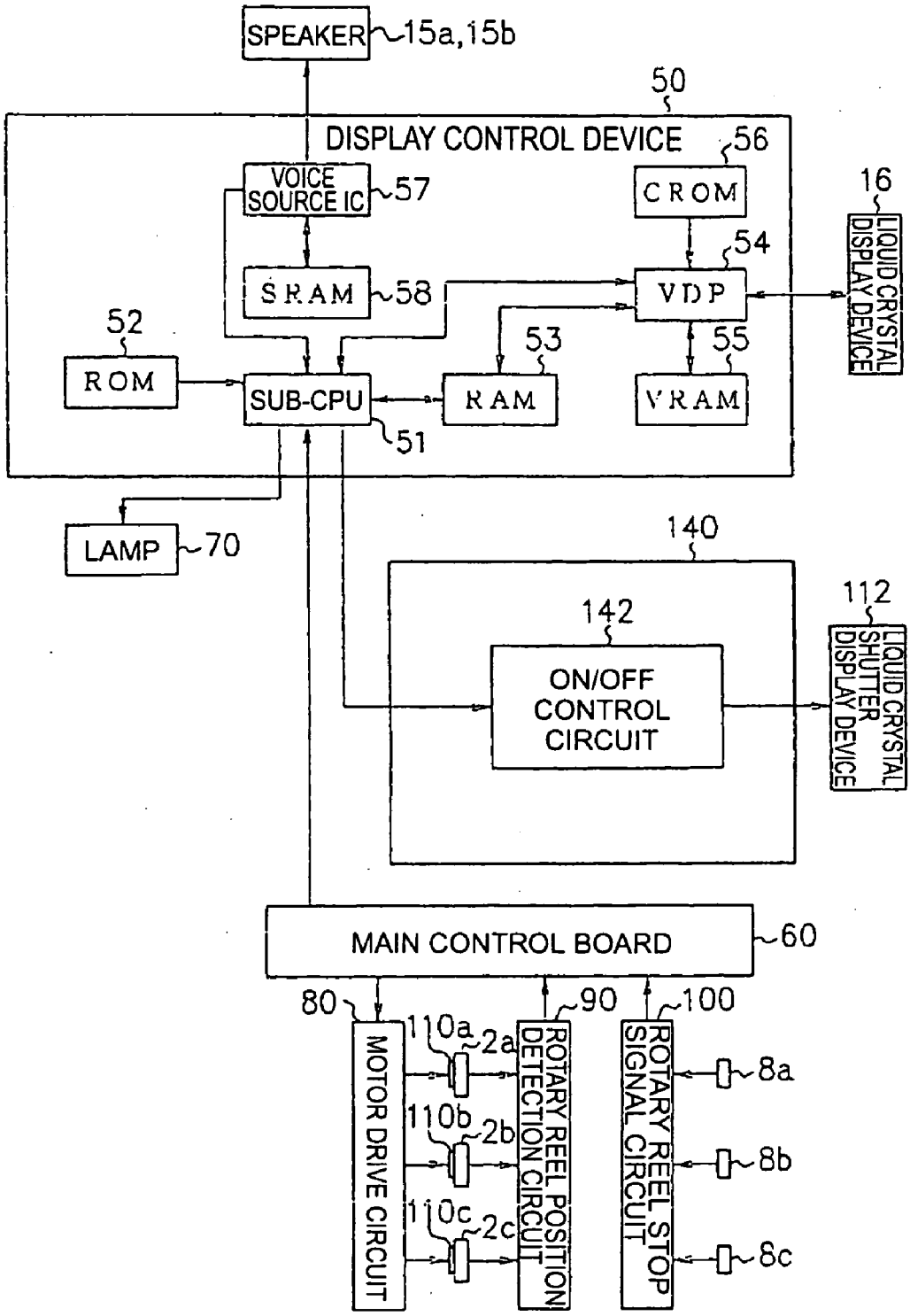
SPEAKER
15a,15b
50
DISPLAY CONTROL DEVICE
56
VOICE SOURCE IC
57
CROM
16
LIQUID CRYSTAL DISPLAY DEVICE
54
SRAM
58
VDP
52
53
55
ROM
SUB-CPU
RAM
VRAM
51
LAMP
70
140
112
142
ON/OFF CONTROL CIRCUIT
LIQUID CRYSTAL SHUTTER DISPLAY DEVICE
MAIN CONTROL BOARD
60
80
90
100
110a
2a
110b
2b
110c
2c
MOTOR DRIVE CIRCUIT
ROTARY REEL POSITION DETECTION CIRCUIT
ROTARY REEL STOP SIGNAL CIRCUIT
8a
8b
8c