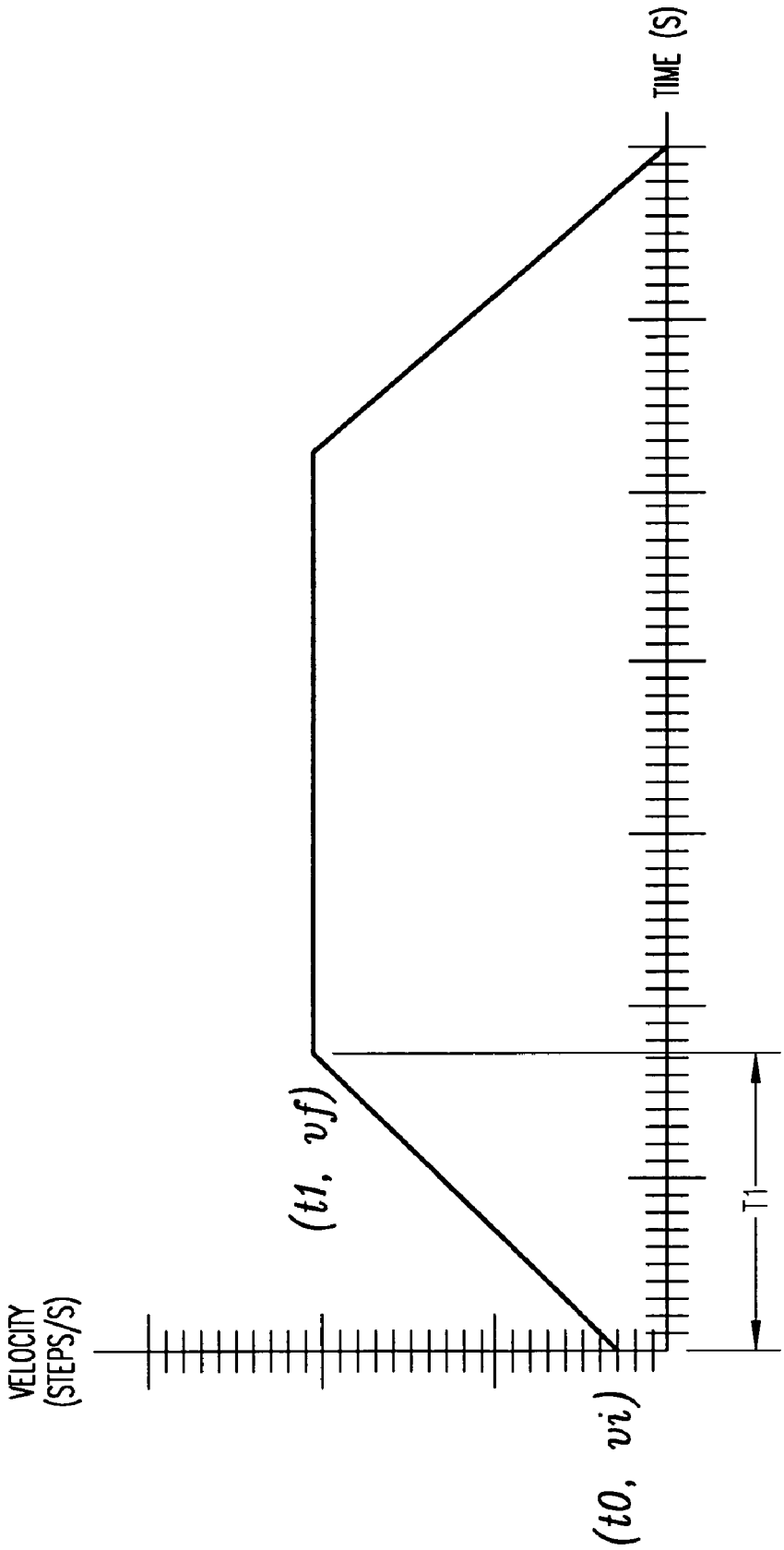

FIG. 1A
(PRIOR ART)