Fig. 4

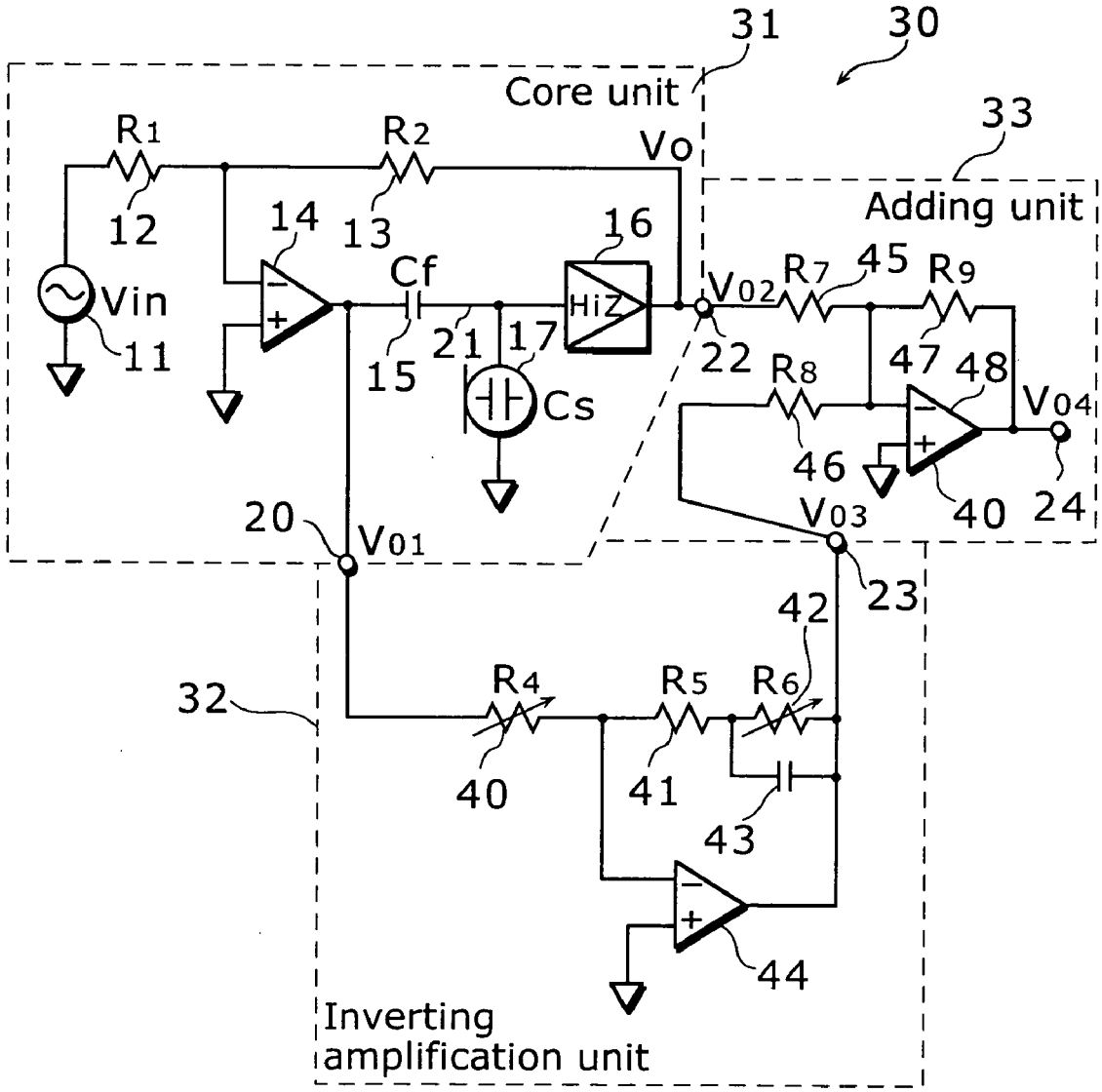
31
30
Core unit
33
Adding unit
R1
R2
Vo
12
13
14
16
Cf
Vin
11
15
21
17
HiZ
Cs
V02
R7
45
R9
22
R8
47
48
V04
46
40
24
20
V01
V03
23
42
32
R4
R5
R6
40
41
43
44
Inverting
amplification unit