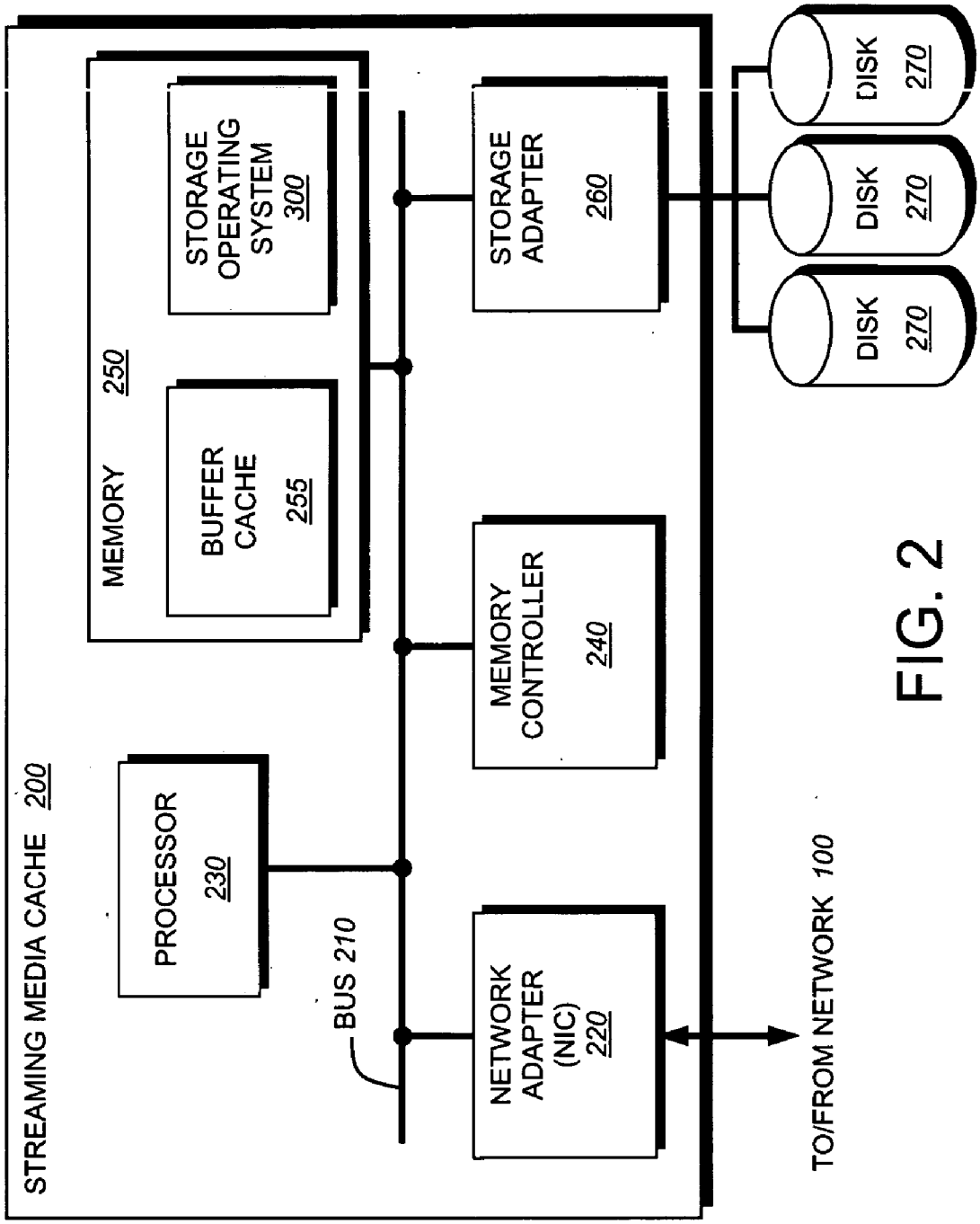
STREAMING MEDIA CACHE 200
MEMORY 250
STORAGE OPERATING SYSTEM 300
BUFFER CACHE 255
PROCESSOR 230
BUS 210
NETWORK ADAPTER (NIC) 220
MEMORY CONTROLLER 240
STORAGE ADAPTER 260
DISK 270
DISK 270
DISK 270
TO/FROM NETWORK 100

FIG. 2