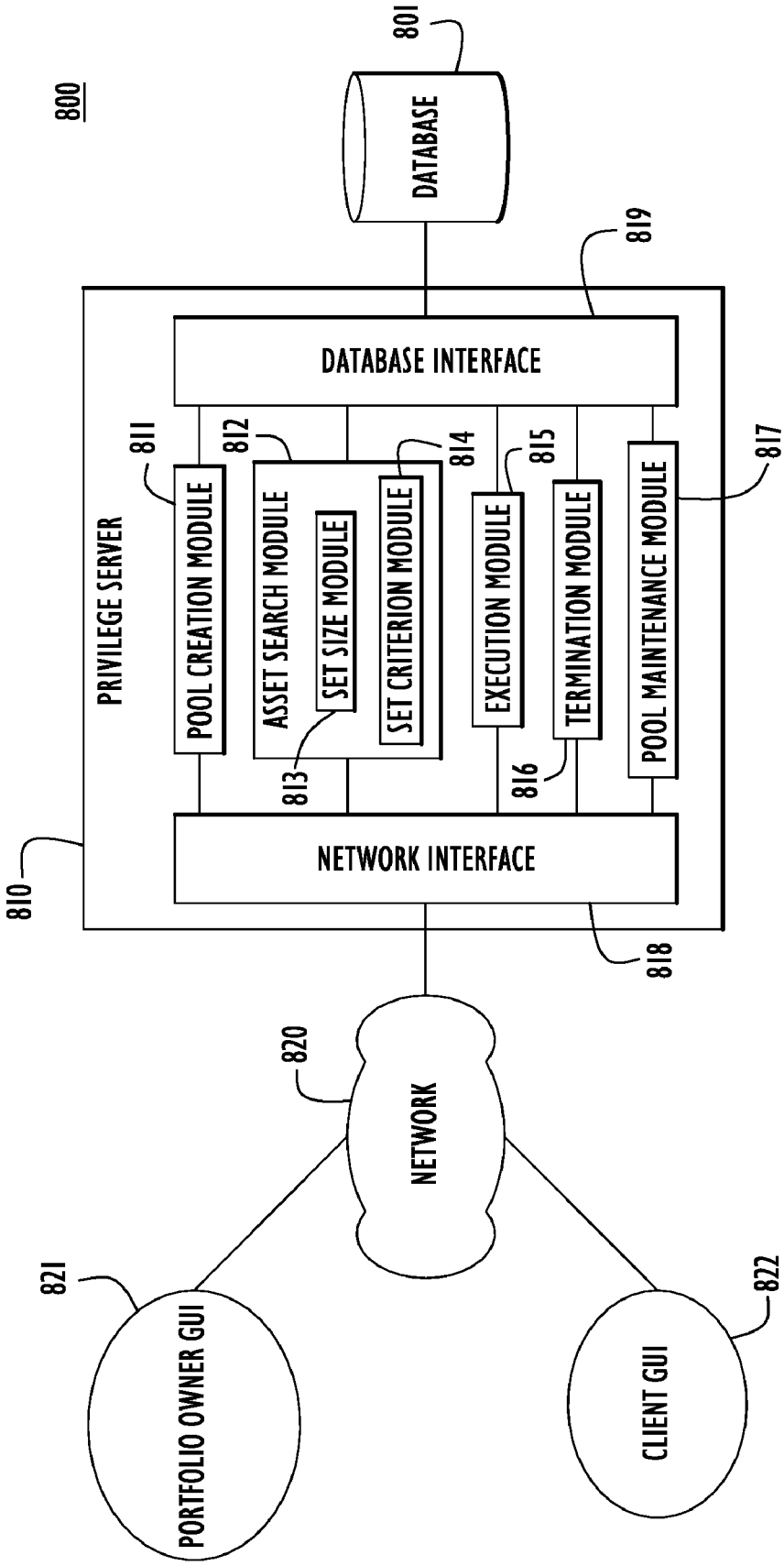
800
801
DATABASE
819
DATABASE INTERFACE
PRIVILEGE SERVER
811
POOL CREATION MODULE
812
ASSET SEARCH MODULE
SET SIZE MODULE
813
814
SET CRITERION MODULE
815
EXECUTION MODULE
816
TERMINATION MODULE
817
POOL MAINTENANCE MODULE
NETWORK INTERFACE
810
818
820
NETWORK
821
PORTFOLIO OWNER GUI
822
CLIENT GUI

FIG.8