US 20070085837A1

(19) United States

(12) Patent Application Publication

(10) Pub. No.: US 2007/0085837 A1

(43) Pub. Date: Apr. 19, 2007

Ricks et al.

(54) TOUCH INPUT DEVICE WITH DISPLAY FRONT

(75) Inventors: **Theodore K. Ricks**, Rochester, NY (US); **Mitchell S. Burberry**, Webster, NY (US); **David M. Johnson**, West Henrietta, NY (US)

Correspondence Address:
Paul A. Leipold
Patent Legal Staff
Eastman Kodak Company
343 State Street
Rochester, NY 14650-2201 (US)

(73) Assignee: **Eastman Kodak Company**

(21) Appl. No.: **11/252,046**

(22) Filed: **Oct. 17, 2005**

Publication Classification

(51) **Int. Cl.**
G09G 5/00 (2006.01)

(52) **U.S. Cl.** **345/173**

(57) **ABSTRACT**
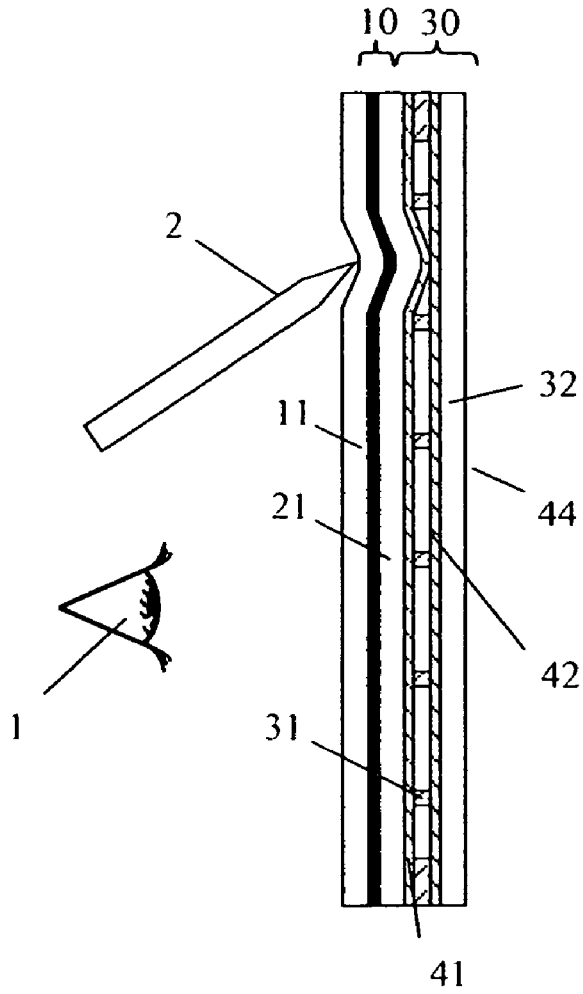
An electrically updatable device having a touch sensor and a flexible display is disclosed, wherein the display is between the touch sensor and a viewer. The display comprises a pressure-insensitive imaging layer of polymer-dispersed imaging material, wherein the thickness of the imaging layer is defined by the polymer.