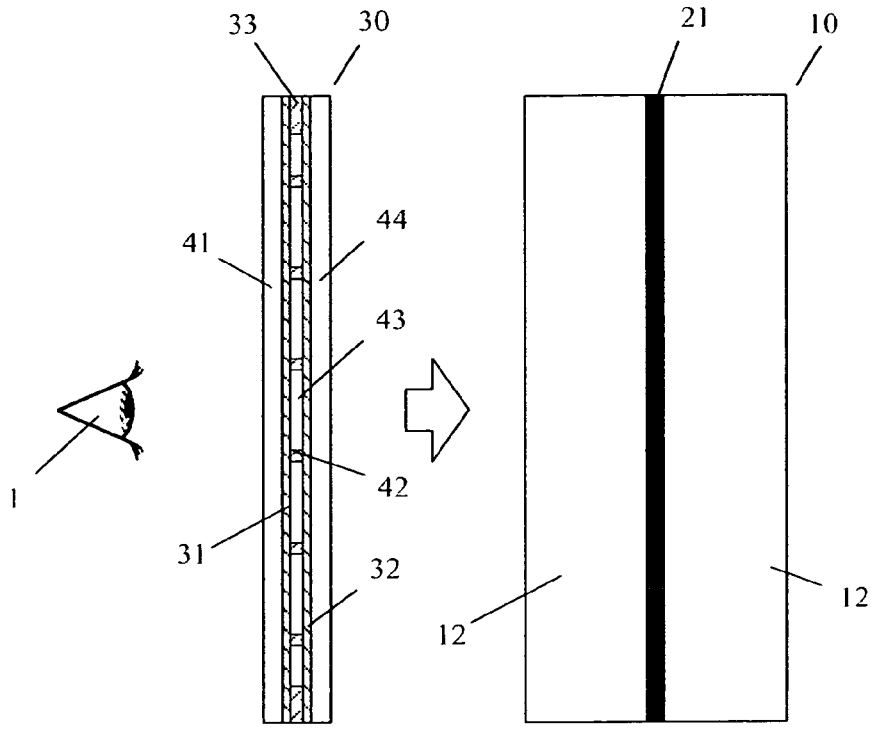


Fig.1
(PRIOR ART)

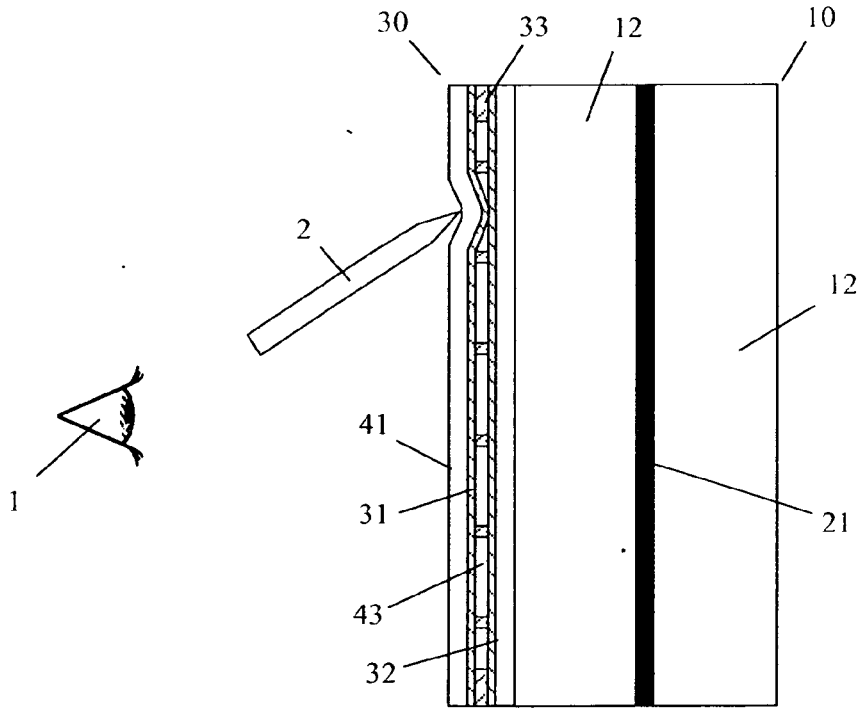


Fig.2
(PRIOR ART)