Fig. 20

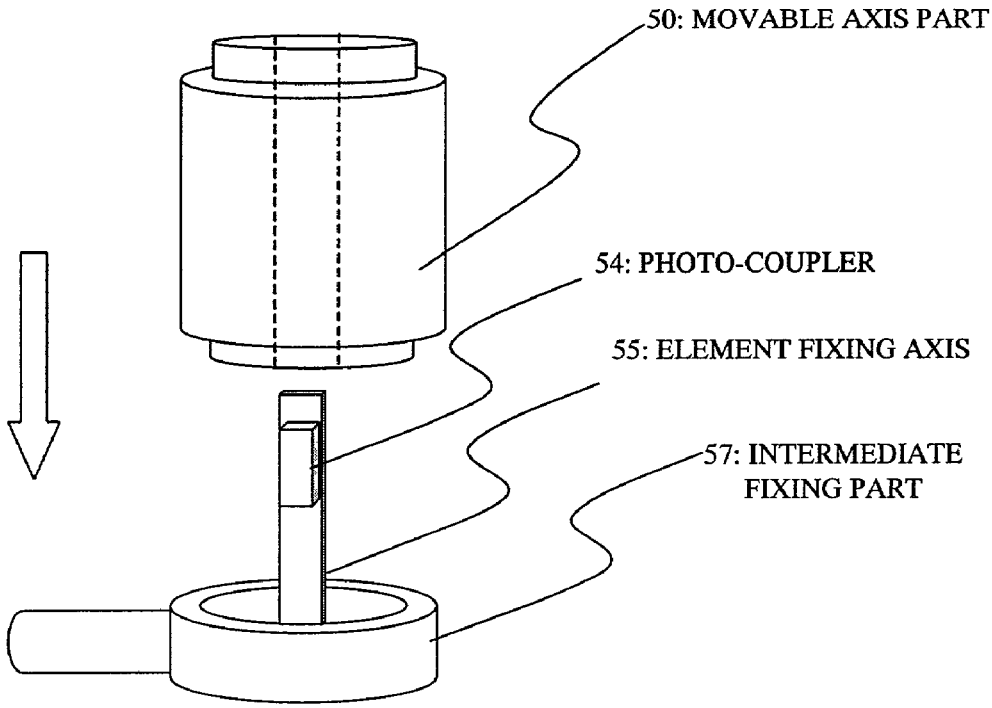
50: MOVABLE AXIS PART
54: PHOTO-COUPLER
55: ELEMENT FIXING AXIS
57: INTERMEDIATE FIXING PART