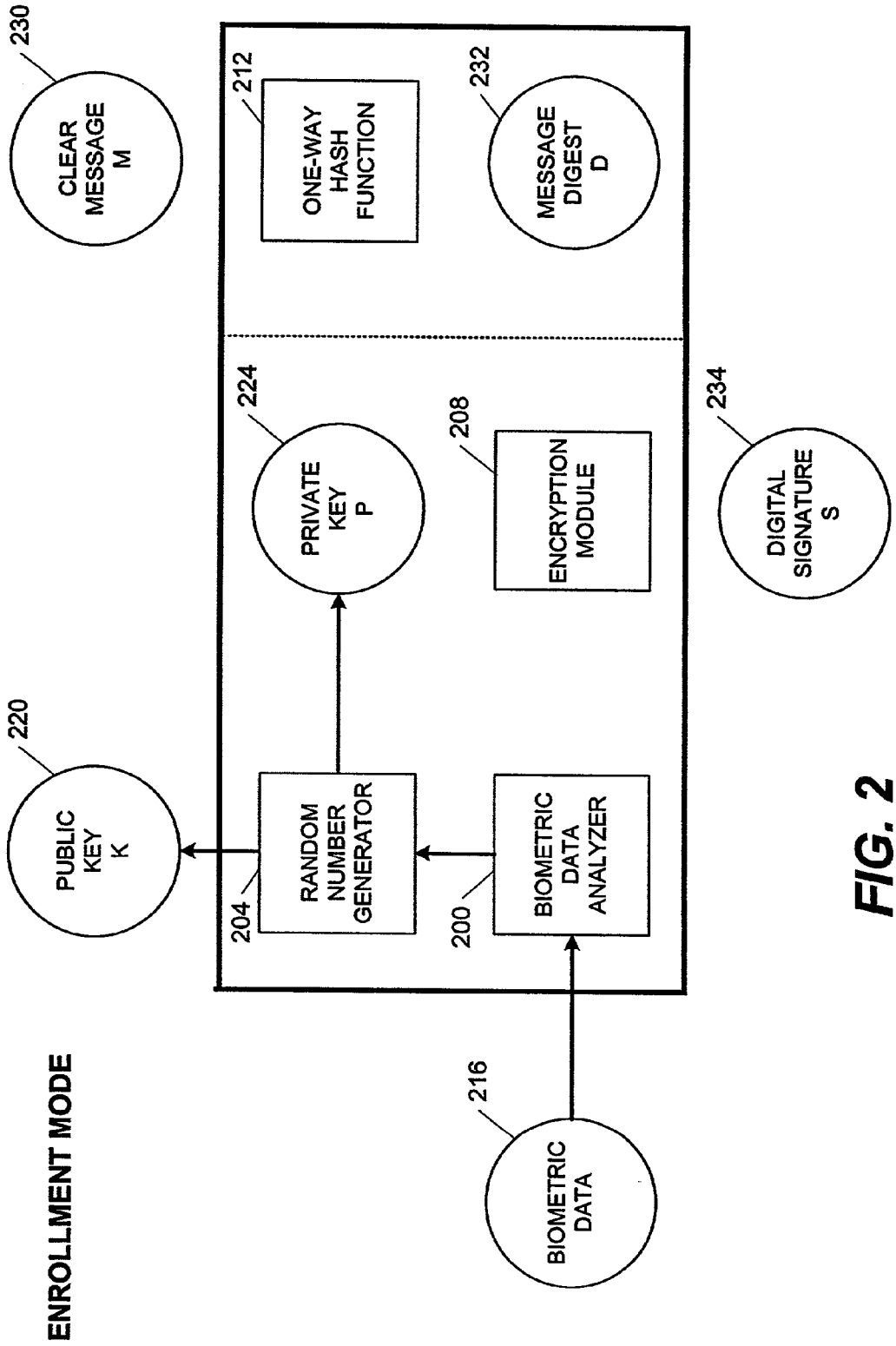
ENROLLMENT MODE
BIOMETRIC DATA
216
BIOMETRIC DATA ANALYZER
200
RANDOM NUMBER GENERATOR
204
PUBLIC KEY K
220
PRIVATE KEY P
224
ENCRYPTION MODULE
208
ONE-WAY HASH FUNCTION
212
CLEAR MESSAGE M
230
MESSAGE DIGEST D
232
DIGITAL SIGNATURE S
234

FIG. 2