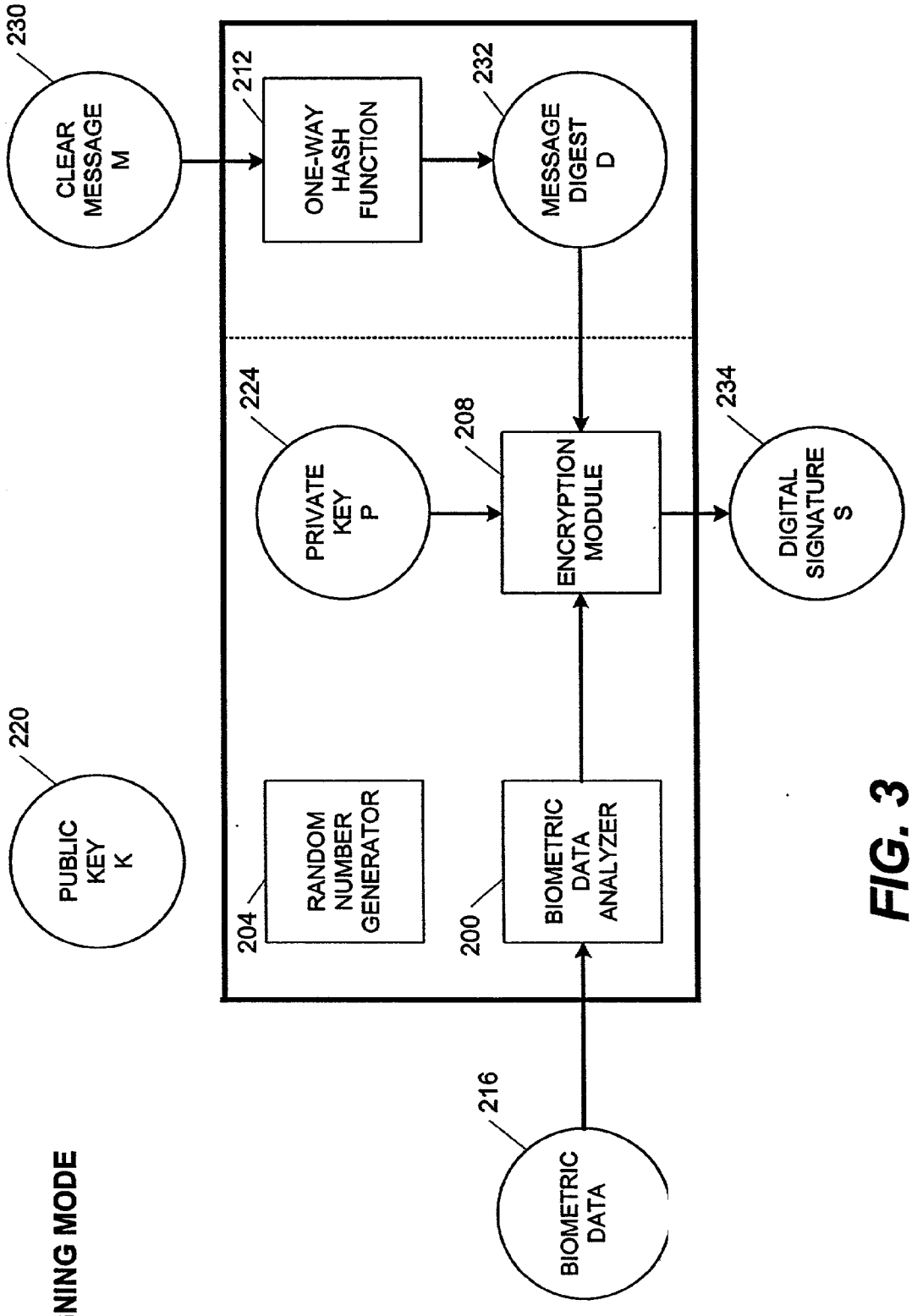
SIGNING MODE
230
CLEAR MESSAGE M
212
ONE-WAY HASH FUNCTION
232
MESSAGE DIGEST D
220
PUBLIC KEY K
224
PRIVATE KEY P
208
ENCRYPTION MODULE
234
DIGITAL SIGNATURE S
204
RANDOM NUMBER GENERATOR
200
BIOMETRIC DATA ANALYZER
216
BIOMETRIC DATA

FIG. 3