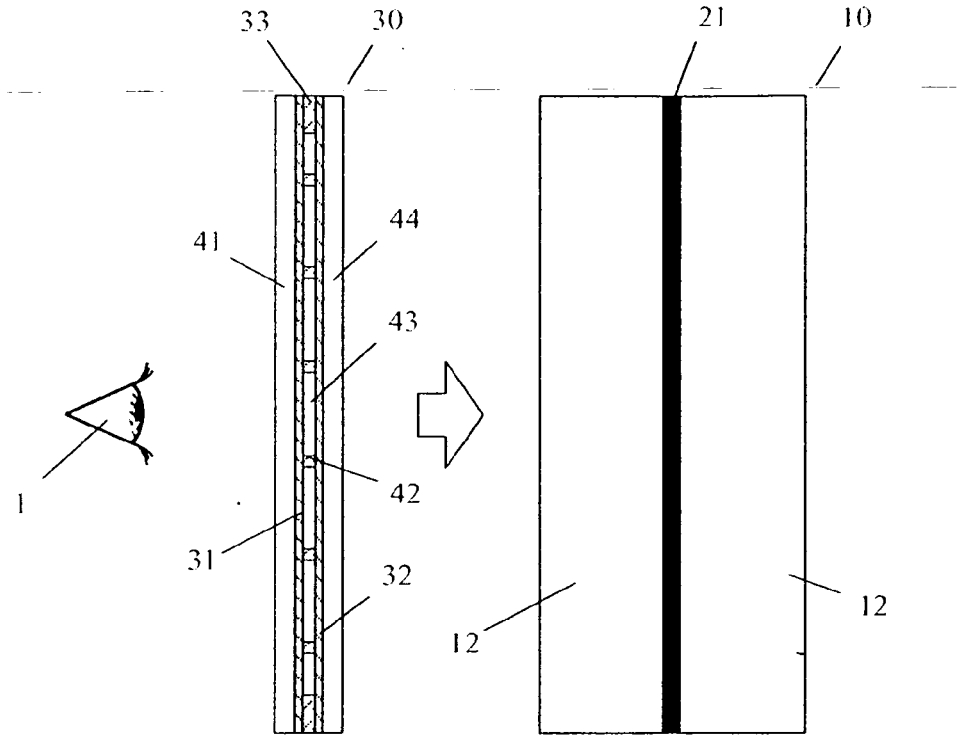

Fig.1
(PRIOR ART)

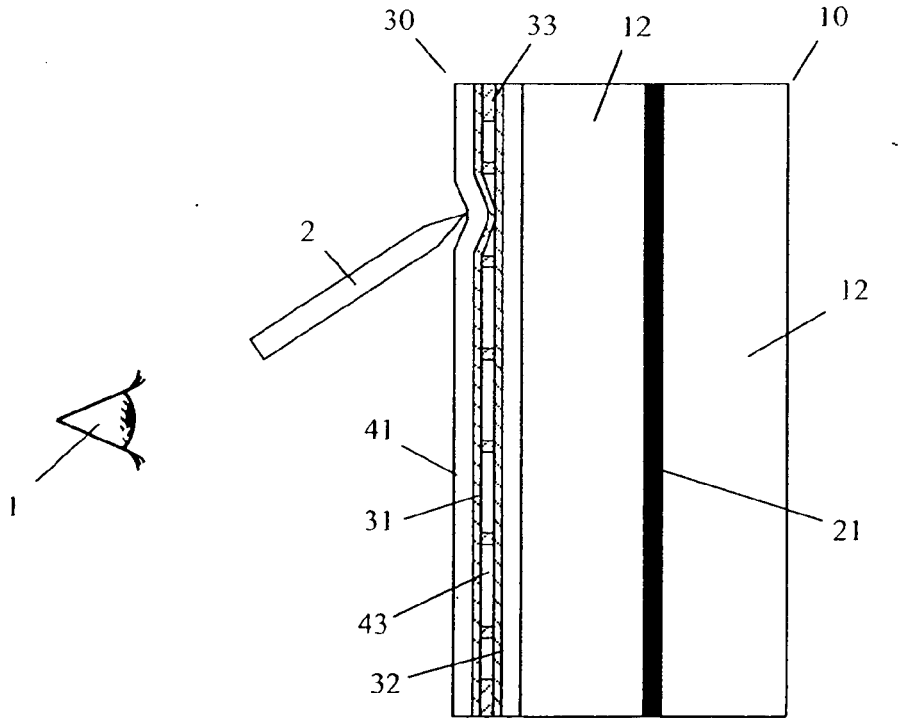

Fig.2
(PRIOR ART)