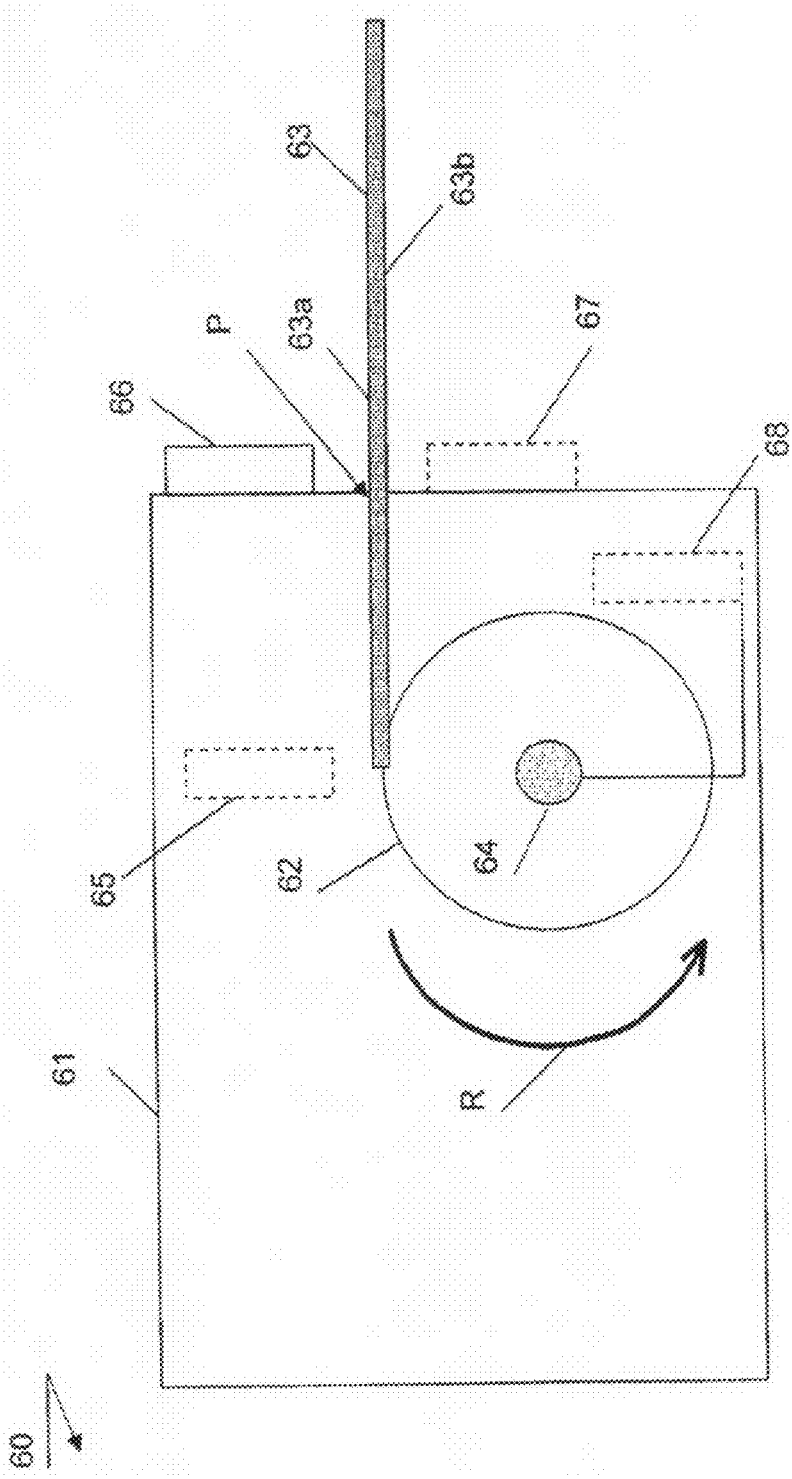

Figure 6