FIG. 1

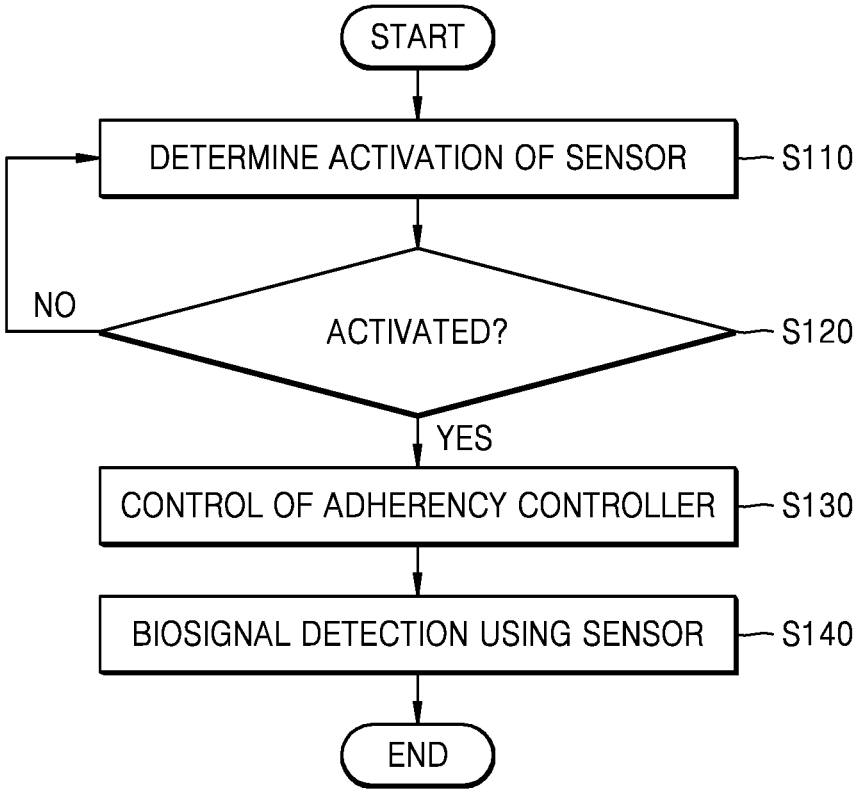
START
DETERMINE ACTIVATION OF SENSOR
S110
NO
ACTIVATED?
S120
YES
CONTROL OF ADHERENCY CONTROLLER
S130
BIOSIGNAL DETECTION USING SENSOR
S140
END