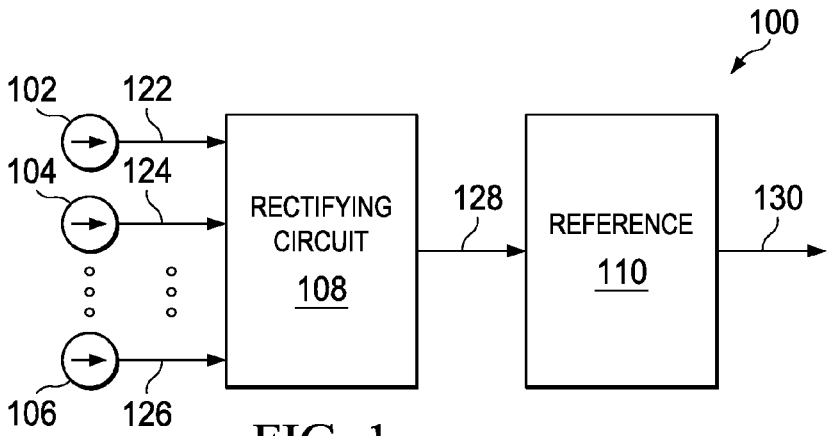
100
102
122
104
124
106
126
RECTIFYING CIRCUIT
108
128
REFERENCE
110
130

FIG. 1

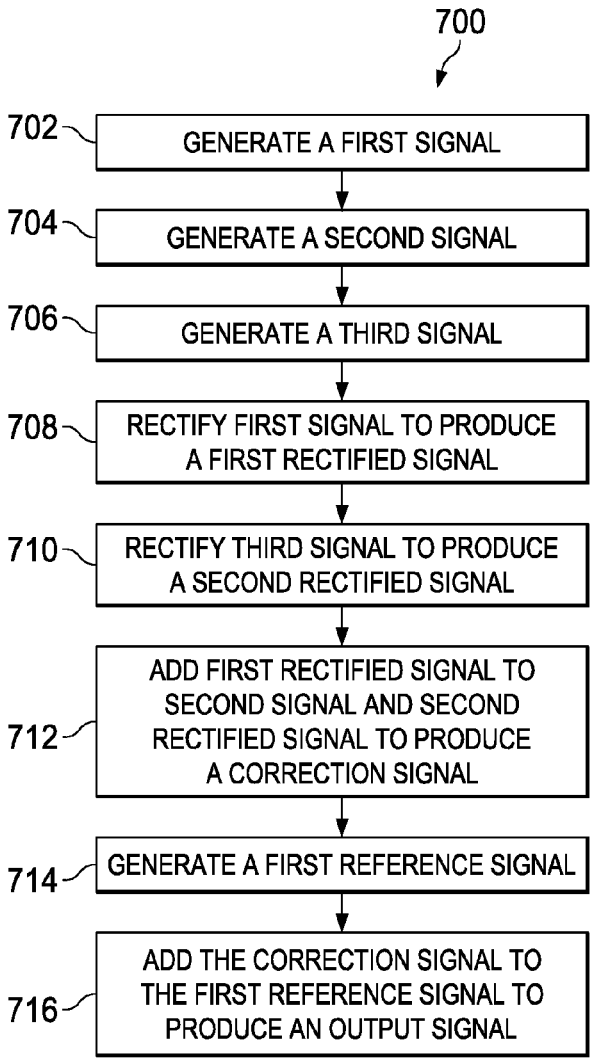
700
702
GENERATE A FIRST SIGNAL
704
GENERATE A SECOND SIGNAL
706
GENERATE A THIRD SIGNAL
708
RECTIFY FIRST SIGNAL TO PRODUCE A FIRST RECTIFIED SIGNAL
710
RECTIFY THIRD SIGNAL TO PRODUCE A SECOND RECTIFIED SIGNAL
712
ADD FIRST RECTIFIED SIGNAL TO SECOND SIGNAL AND SECOND RECTIFIED SIGNAL TO PRODUCE A CORRECTION SIGNAL
714
GENERATE A FIRST REFERENCE SIGNAL
716
ADD THE CORRECTION SIGNAL TO THE FIRST REFERENCE SIGNAL TO PRODUCE AN OUTPUT SIGNAL

FIG. 7