US 20050007339A1

(19) United States

(12) Patent Application Publication

(10) Pub. No.: US 2005/0007339 A1

(43) Pub. Date: Jan. 13, 2005

Sato

(54) INPUTTING METHOD AND INPUT DEVICE

(76) Inventor: **Tadamitsu Sato**, Fukushima-ken (JP)

Correspondence Address:
BRINKS HOFER GILSON & LIONE
P.O. BOX 10395
CHICAGO, IL 60610 (US)

(21) Appl. No.: **10/865,033**

(22) Filed: **Jun. 10, 2004**

(30) **Foreign Application Priority Data**

Jun. 12, 2003	(JP)	2003-167958
Mar. 31, 2004	(JP)	2004-105861
Jun. 8, 2004	(JP)	2004-170144

Publication Classification

(51) **Int. Cl.**[7] **G09G 5/00**

(52) **U.S. Cl.** **345/156**

(57) **ABSTRACT**
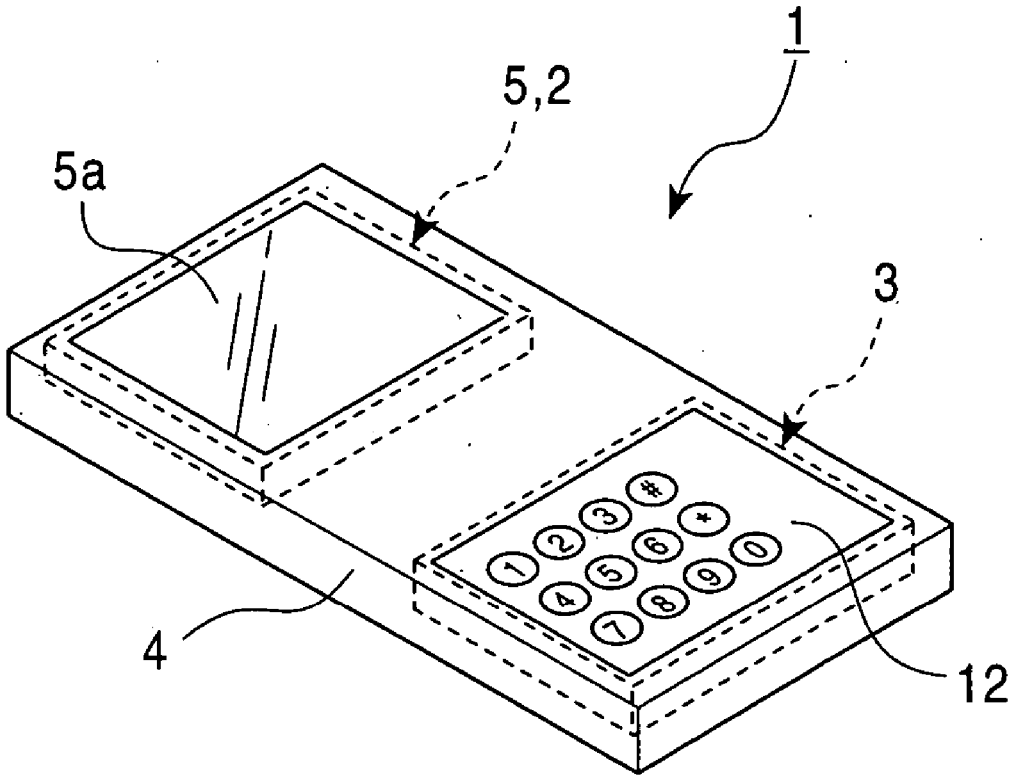
An input device includes a flat first input unit for a first input operation, a second input unit for a second input operation, a display unit having a display portion displaying data, and a control unit controlling each unit. The control unit gives an operator feedback by provisionally displaying input data obtained from the first input operation, and then confirms the input by the second input operation.