FIG. 11

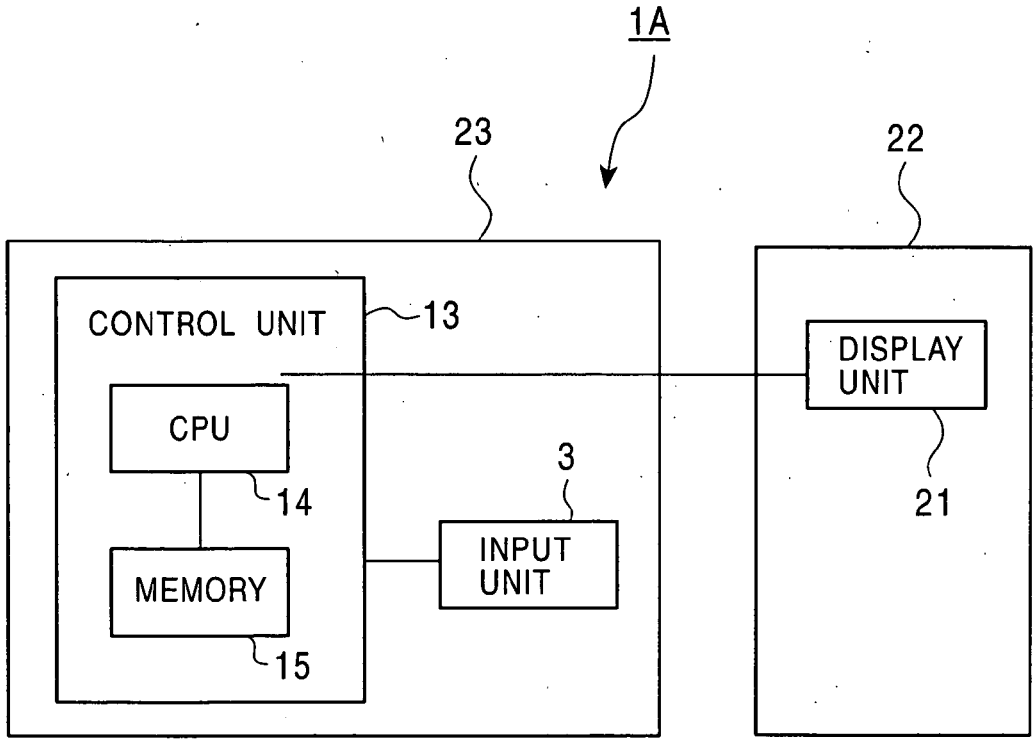
1A
23
22
CONTROL UNIT
13
CPU
14
MEMORY
15
3
INPUT UNIT
DISPLAY UNIT
21