FIG.1

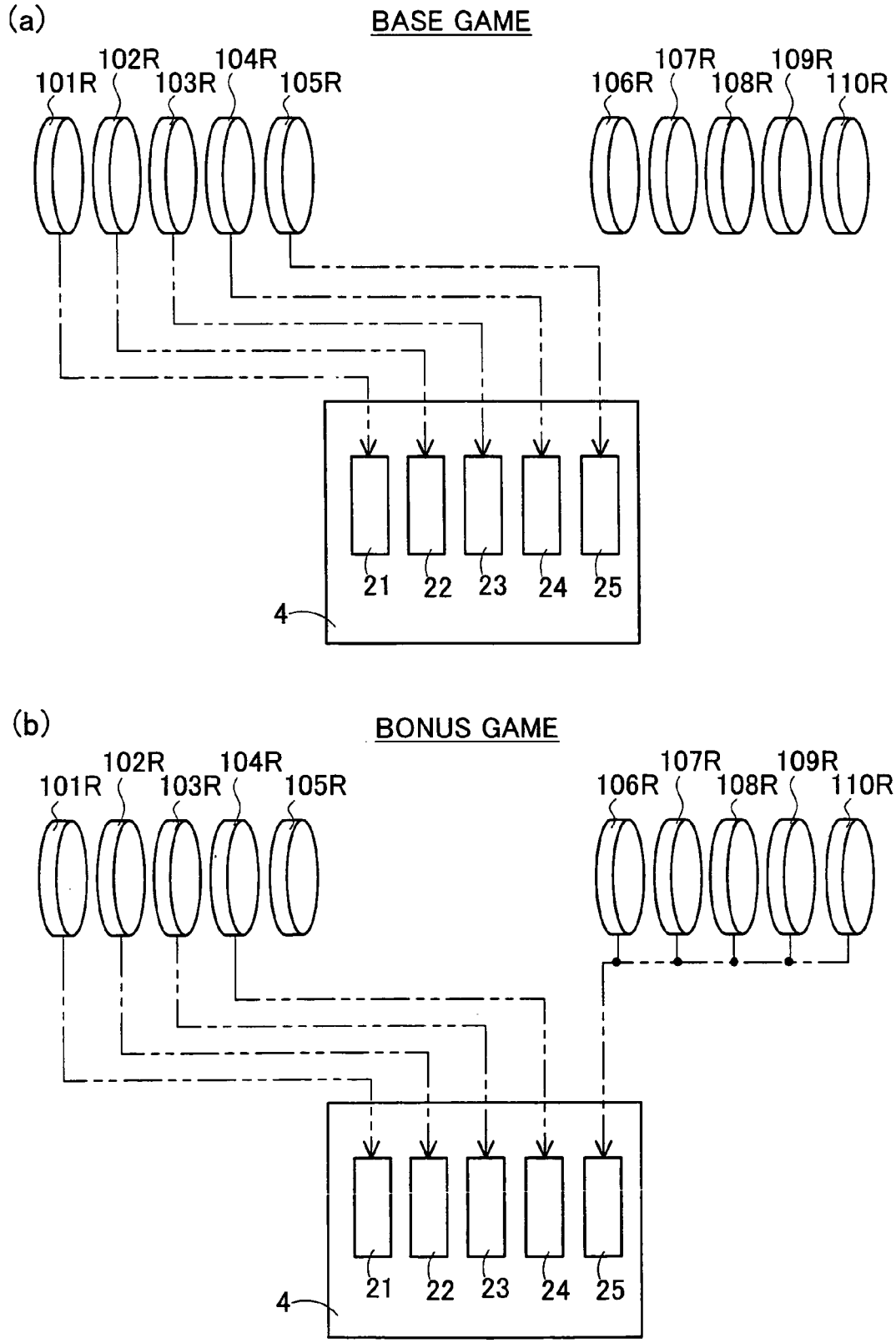
(a)
BASE GAME
101R
102R
103R
104R
105R
106R
107R
108R
109R
110R
21
22
23
24
25
4
(b)
BONUS GAME
101R
102R
103R
104R
105R
106R
107R
108R
109R
110R
21
22
23
24
25
4