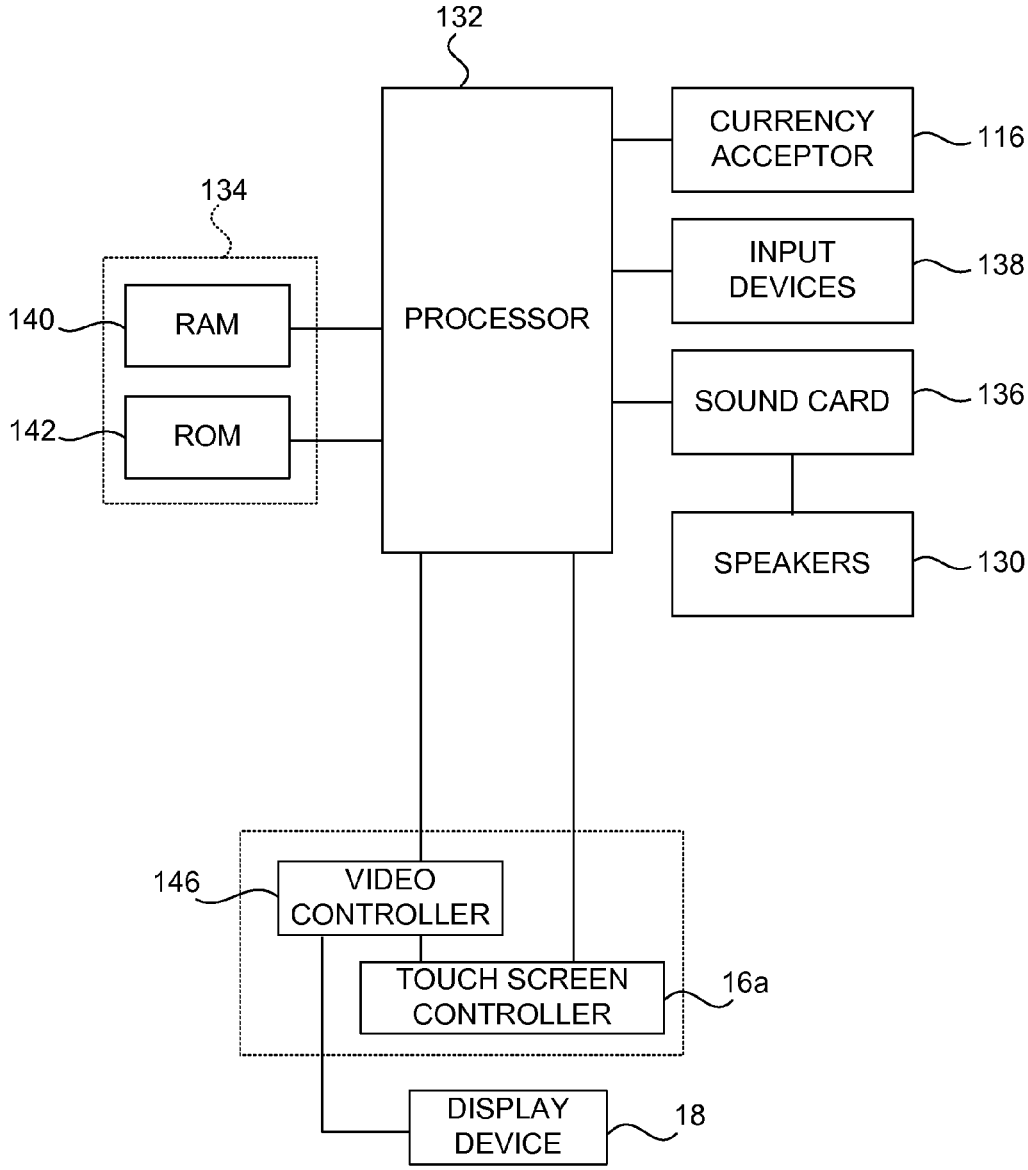
132
PROCESSOR
CURRENCY ACCEPTOR
116
INPUT DEVICES
138
SOUND CARD
136
SPEAKERS
130
134
140
RAM
142
ROM
146
VIDEO CONTROLLER
TOUCH SCREEN CONTROLLER
16a
DISPLAY DEVICE
18

FIG. 7