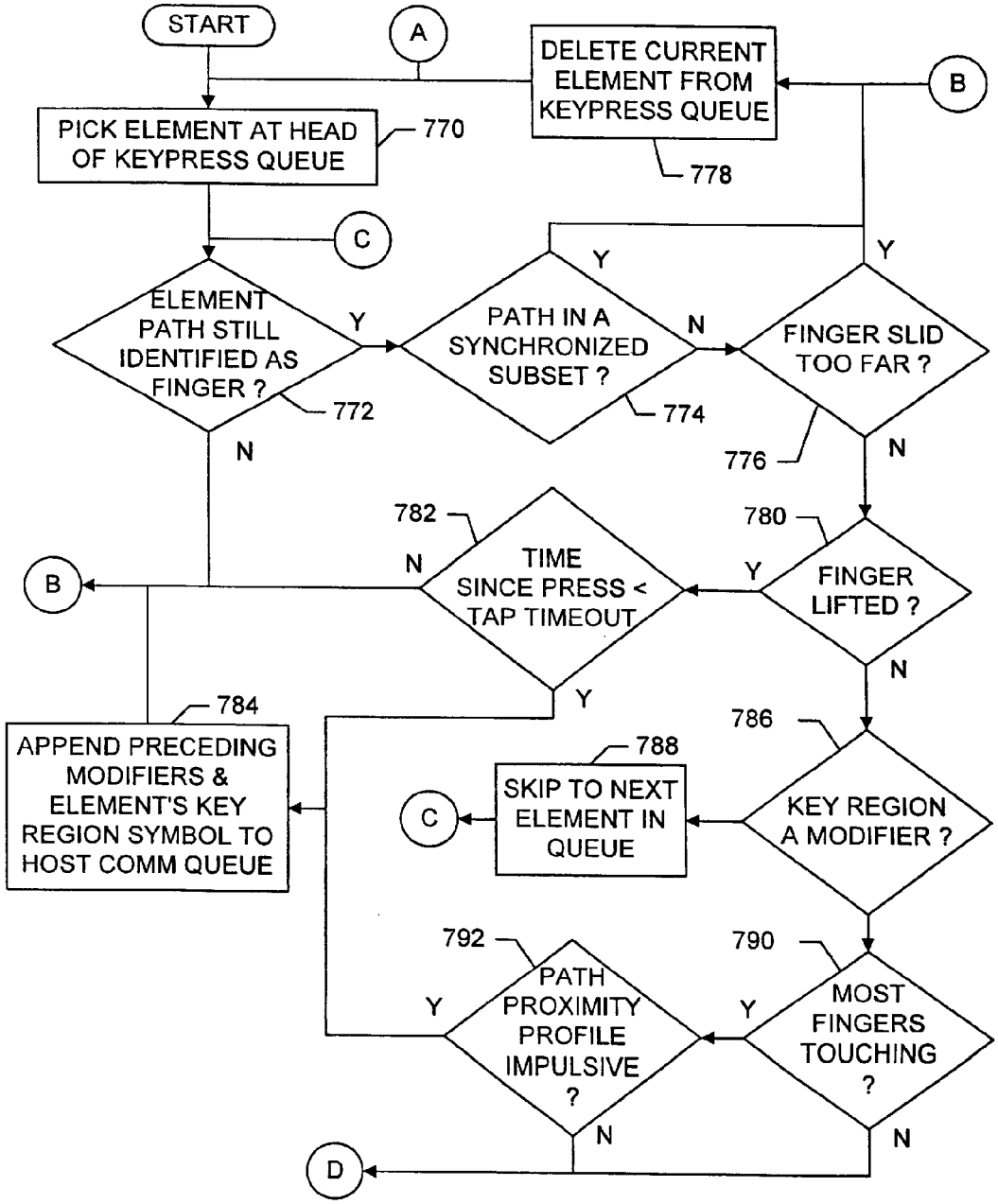
START
A
DELETE CURRENT ELEMENT FROM KEYPRESS QUEUE
B
PICK ELEMENT AT HEAD OF KEYPRESS QUEUE
770
778
C
ELEMENT PATH STILL IDENTIFIED AS FINGER ?
772
Y
N
PATH IN A SYNCHRONIZED SUBSET ?
774
Y
N
FINGER SLID TOO FAR ?
776
Y
N
TIME SINCE PRESS < TAP TIMEOUT
782
N
Y
FINGER LIFTED ?
780
Y
N
B
APPEND PRECEDING MODIFIERS & ELEMENT'S KEY REGION SYMBOL TO HOST COMM QUEUE
784
Y
KEY REGION A MODIFIER ?
786
SKIP TO NEXT ELEMENT IN QUEUE
788
C
PATH PROXIMITY PROFILE IMPULSIVE ?
792
Y
N
MOST FINGERS TOUCHING ?
790
Y
N
D

FIG. 43A