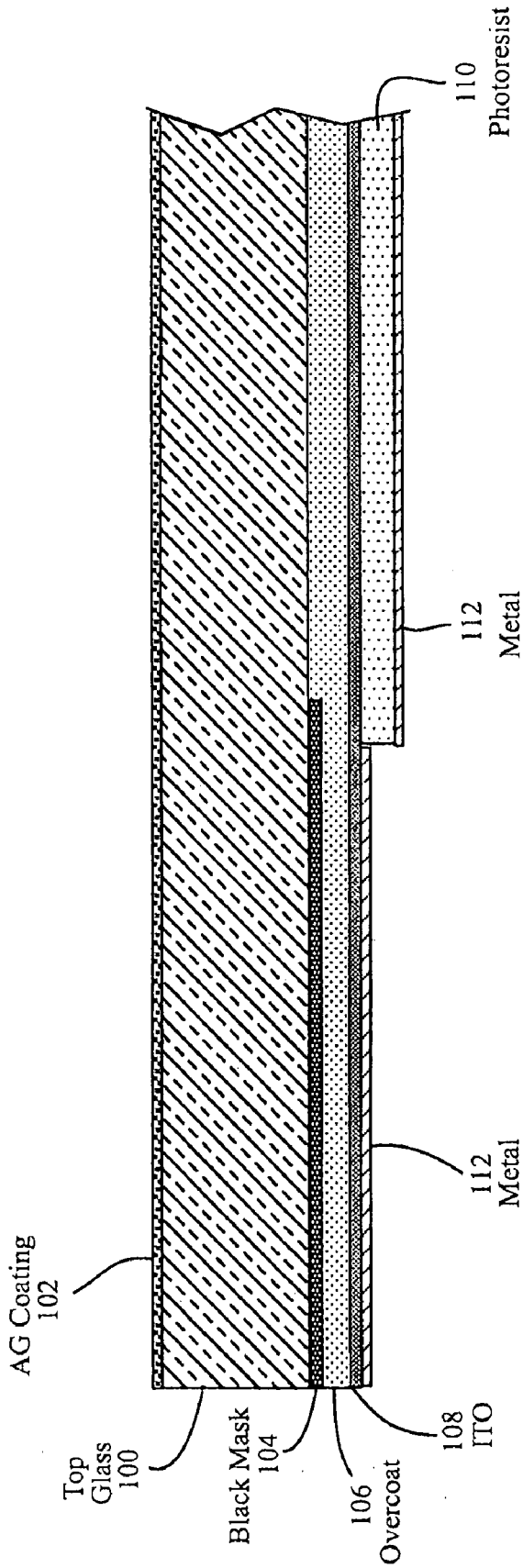
AG Coating
102
Top
Glass
100
Black Mask
104
106
Overcoat
108
ITO
112
Metal
112
Metal
110
Photoresist

FIG. 1A