FIG. 11

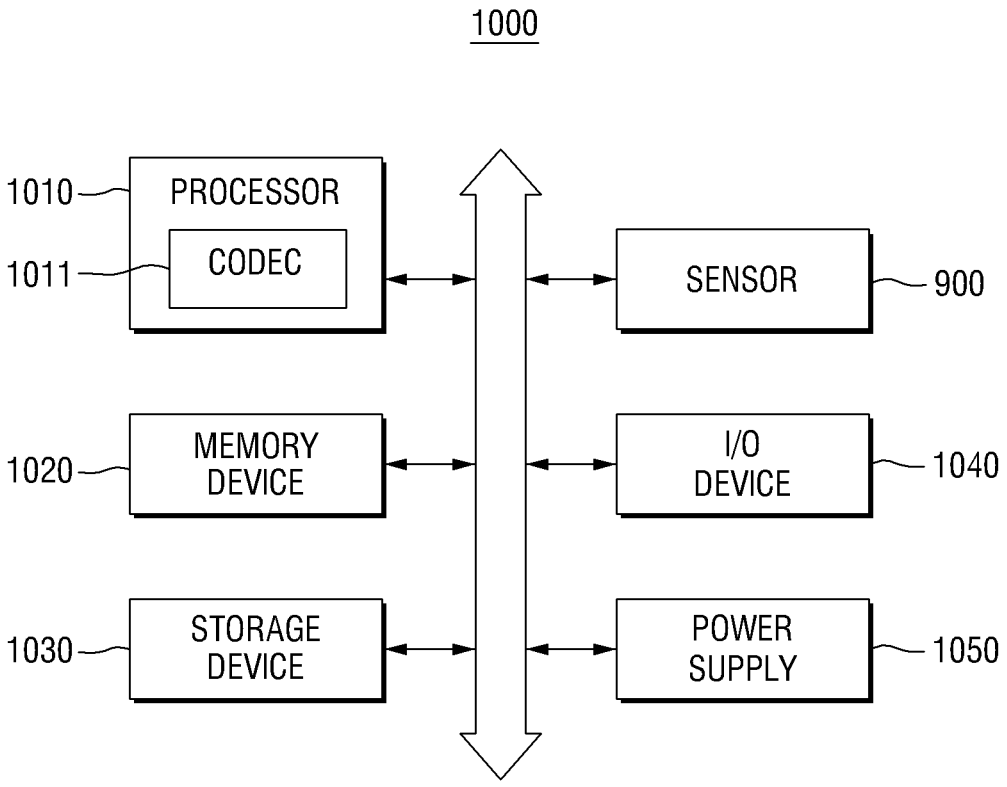
1000
1010
PROCESSOR
1011
CODEC
SENSOR
900
1020
MEMORY DEVICE
I/O DEVICE
1040
1030
STORAGE DEVICE
POWER SUPPLY
1050