FIG. 19 PRIOR ART

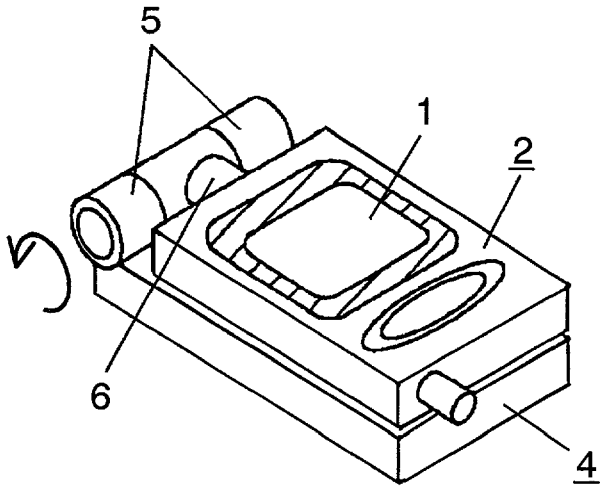

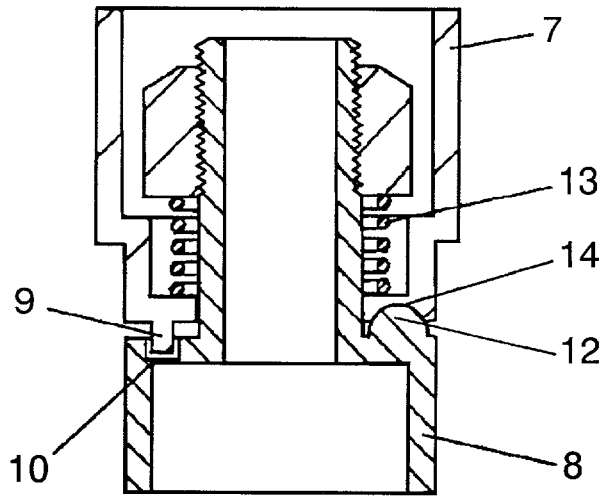
FIG. 20 PRIOR ART