FIG. 1

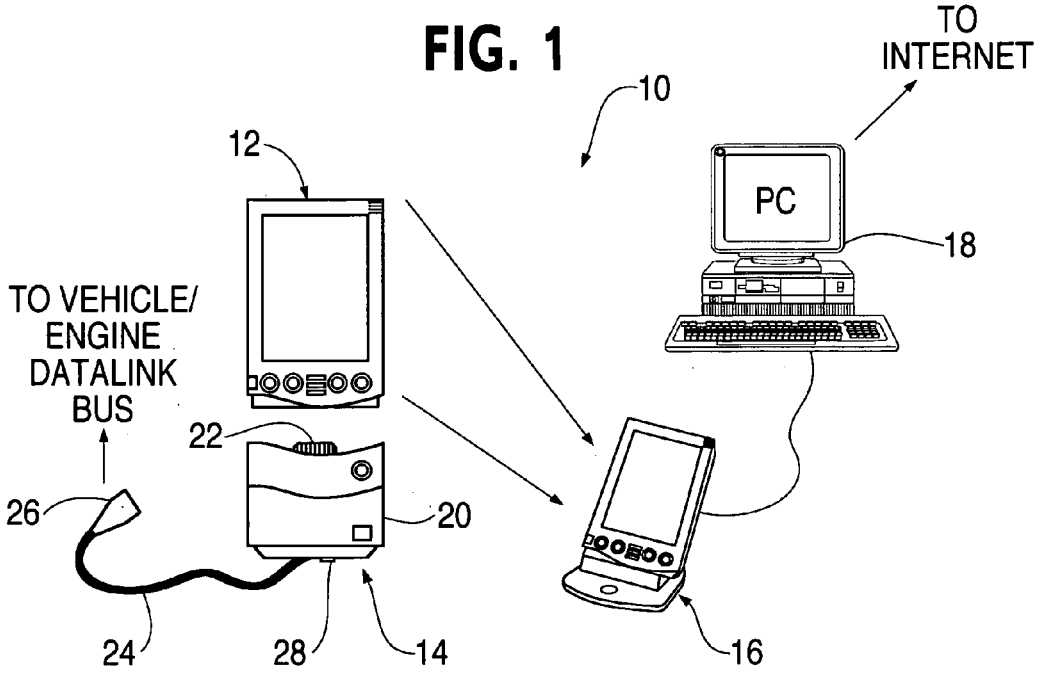
TO INTERNET
10
12
PC
18
TO VEHICLE/ ENGINE DATALINK BUS
22
26
20
24
28
14
16

FIG. 2

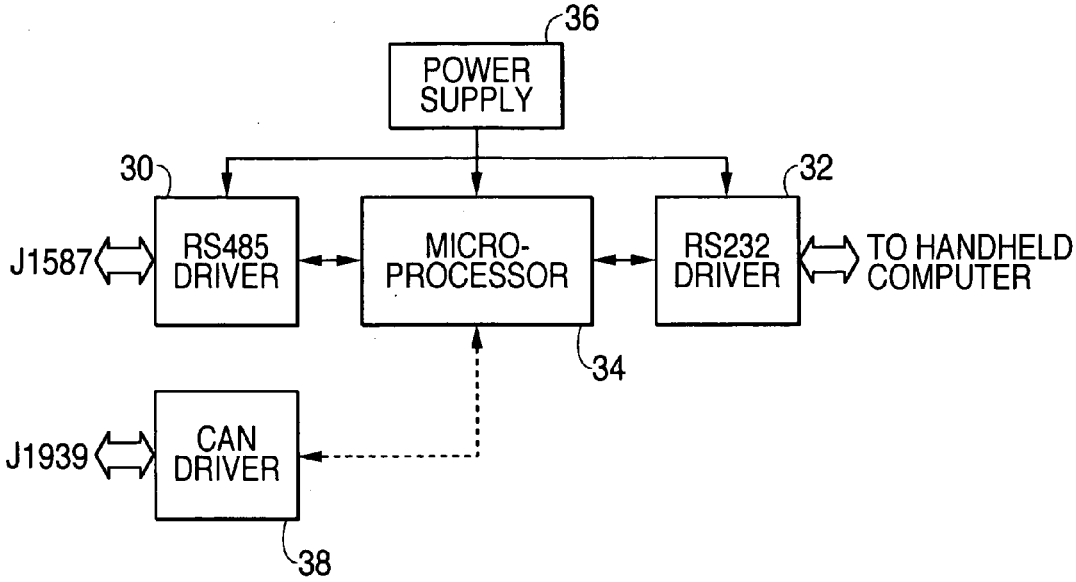
36
POWER SUPPLY
30
32
J1587
RS485 DRIVER
MICRO-PROCESSOR
RS232 DRIVER
TO HANDHELD COMPUTER
34
J1939
CAN DRIVER
38