US 20050199440A1

(19) United States

(12) Patent Application Publication

(10) Pub. No.: US 2005/0199440 A1

(43) Pub. Date: Sep. 15, 2005

Keefe et al.

(54) ACTIVE SEAL ASSEMBLIES FOR SOUND ISOLATION

(76) Inventors: **Andrew C. Keefe**, Santa Monica, CA (US); **William Barvosa-Carter**, Ventura, CA (US); **Christopher P. Henry**, Newbury Park, CA (US); **Guillermo A. Herrera**, Winnetka, CA (US); **Geoffrey P. Mc Knight**, Los Angeles, CA (US); **Nancy L. Johnson**, Northville, MI (US)

Correspondence Address:
KATHRYN A MARRA
General Motors Corporation
Legal Staff, Mail Code 482-C23-B21
P.O. Box 300
Detroit, MI 48265-3000 (US)

(21) Appl. No.: **11/074,584**

(22) Filed: **Mar. 8, 2005**

Related U.S. Application Data

(60) Provisional application No. 60/552,781, filed on Mar. 12, 2004.

Publication Classification

(51) **Int. Cl.**[7] **E04B 1/82**

(52) **U.S. Cl.** **181/284**

(57) **ABSTRACT**
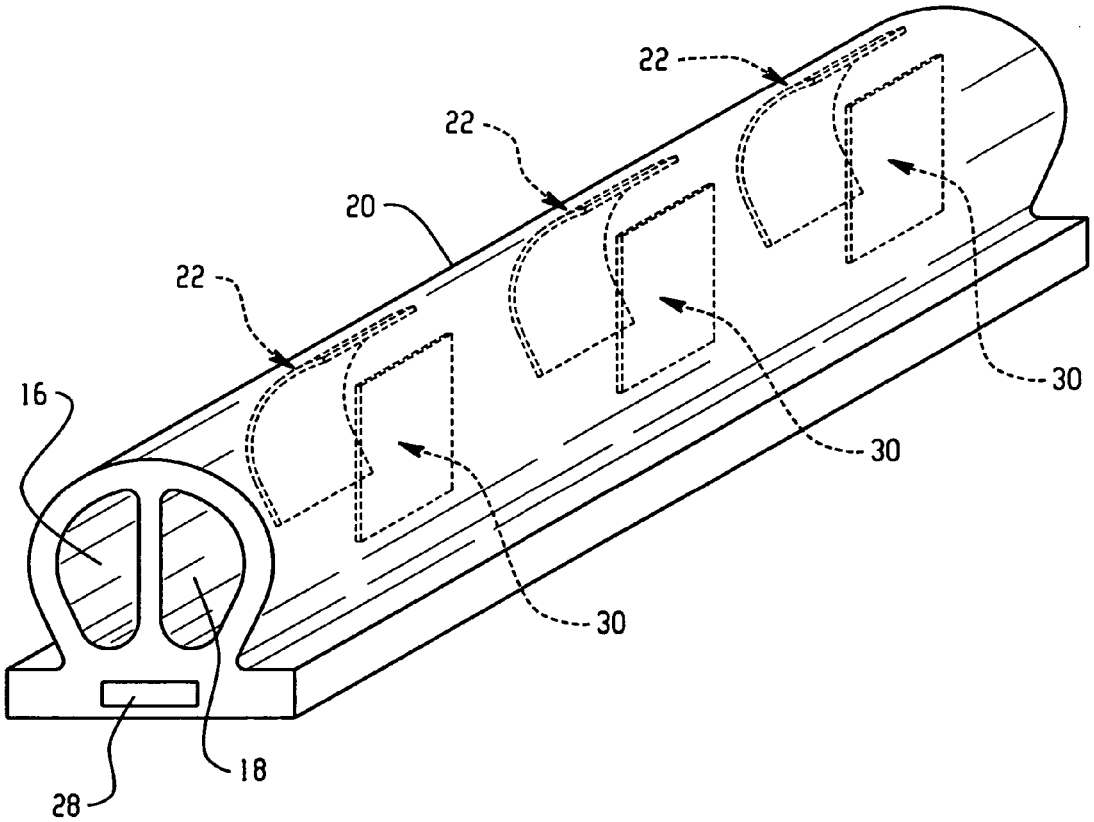
Active seal assemblies employing active materials that can be controlled and remotely changed to alter the seal effectiveness, wherein the active seal assemblies actively change modulus properties such as stiffness, shape orientation, and the like. The active seal assemblies are generally configured to reduce the noise (sound waves) that is transmitted through the seal by measuring and actively canceling and/or absorbing the noise.