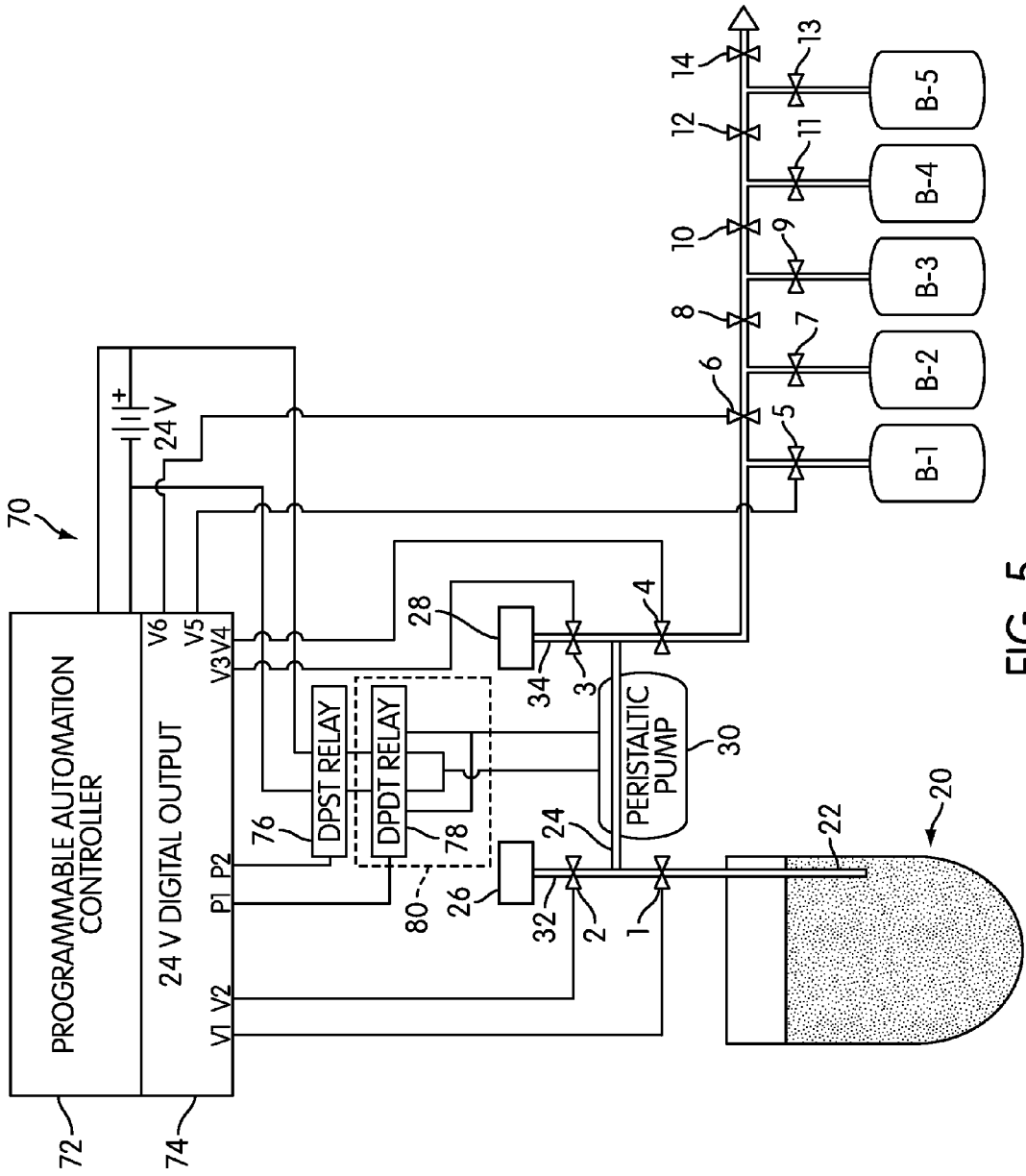
PROGRAMMABLE AUTOMATION CONTROLLER
24 V DIGITAL OUTPUT
V1 V2
P1 P2
V3V4
V5
V6
24 V
DPST RELAY
DPDT RELAY
PERISTALTIC PUMP
B-1
B-2
B-3
B-4
B-5
70
72
74
76
78
80
26
28
30
32
34
20
22
24
1
2
3
4
5
6
7
8
9
10
11
12
13
14

FIG. 5