Figure 4a

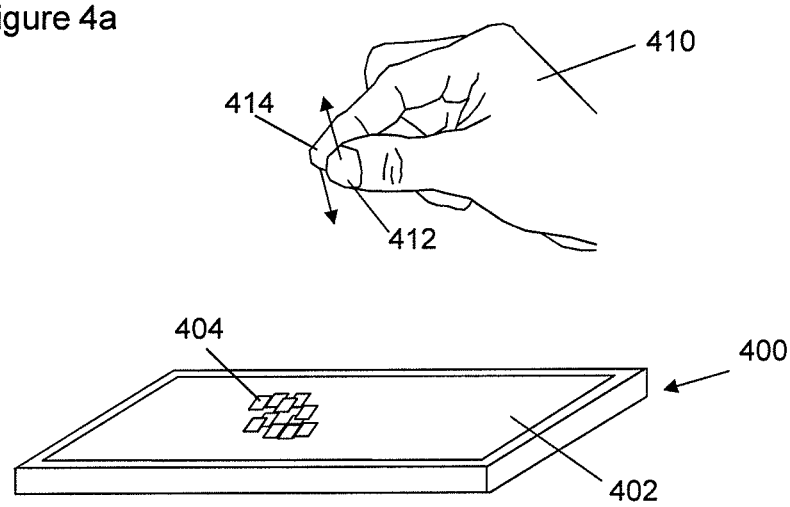

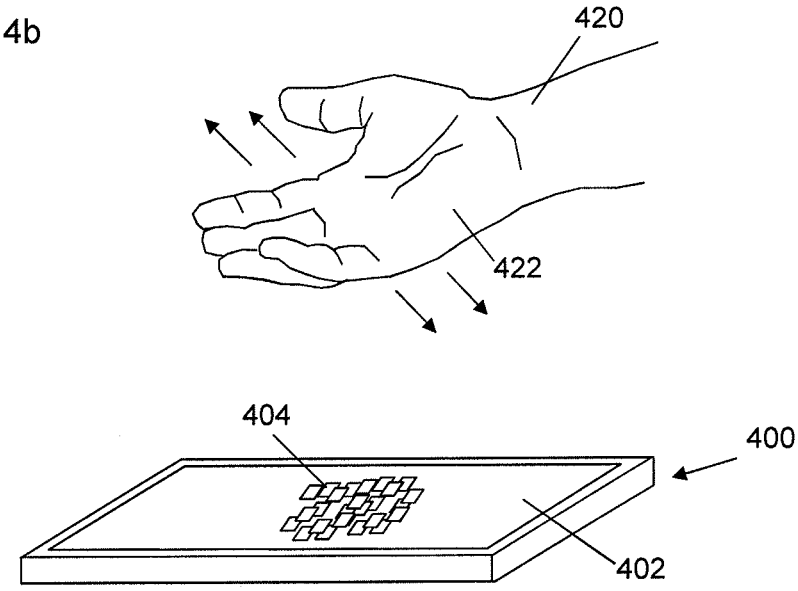
Figure 4b