FIG. 1

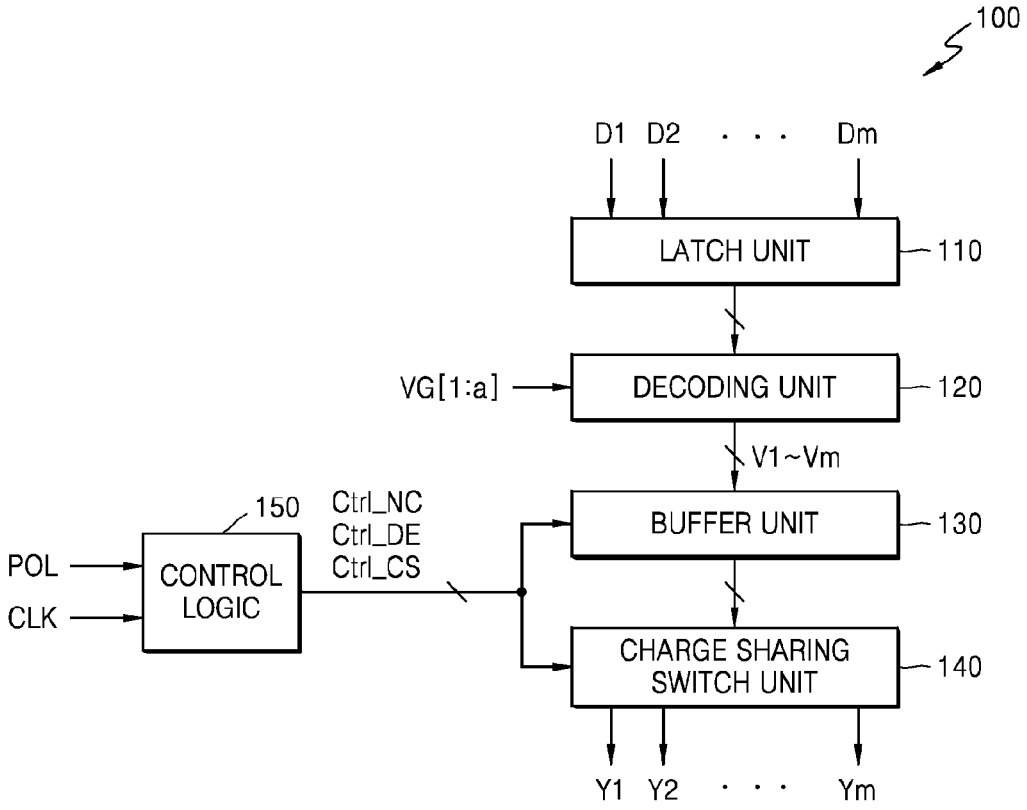
100
D1 D2 · · · Dm
LATCH UNIT
110
VG[1:a]
DECODING UNIT
120
V1~Vm
150
Ctrl_NC
Ctrl_DE
Ctrl_CS
BUFFER UNIT
130
POL
CLK
CONTROL LOGIC
CHARGE SHARING SWITCH UNIT
140
Y1 Y2 · · · Ym