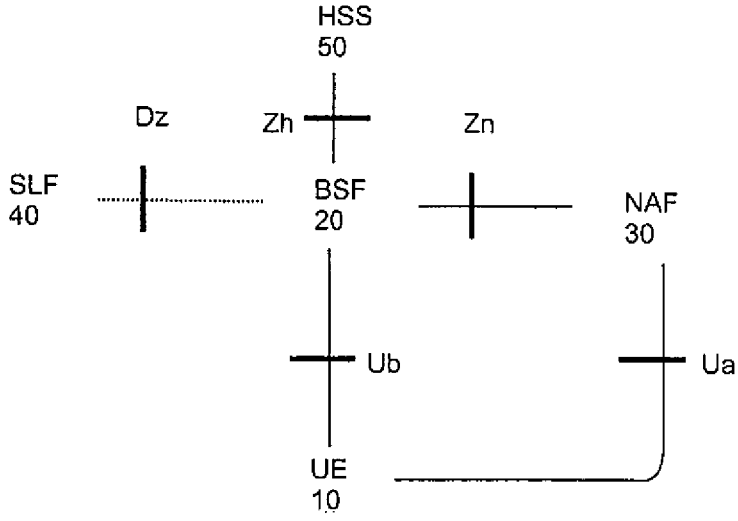
HSS
50
Dz
Zh
Zn
SLF
40
BSF
20
NAF
30
Ub
Ua
UE
10

Fig. 1

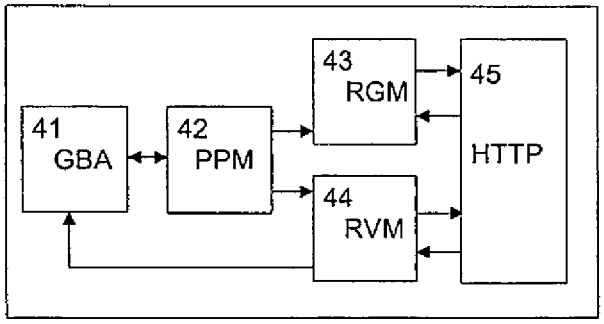
43
RGM
45
41
GBA
42
PPM
HTTP
44
RVM

Fig. 2