FIG.64A

Top View

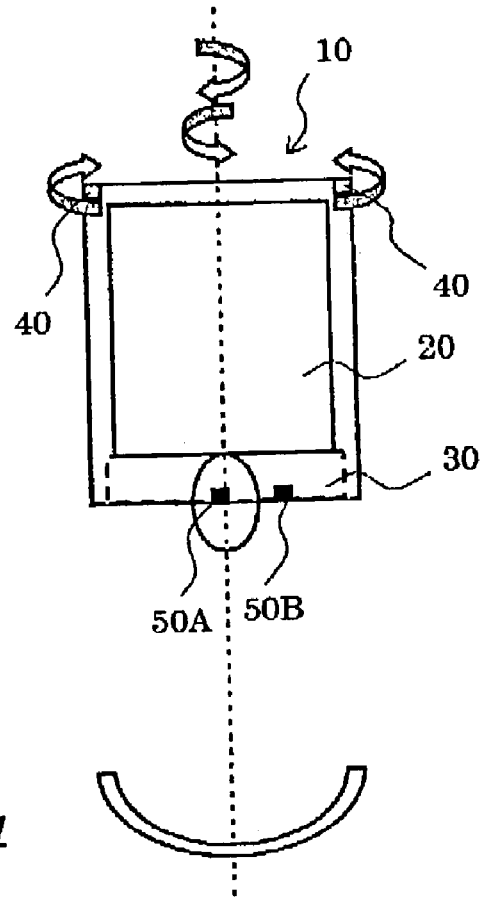


FIG.64B

Side View
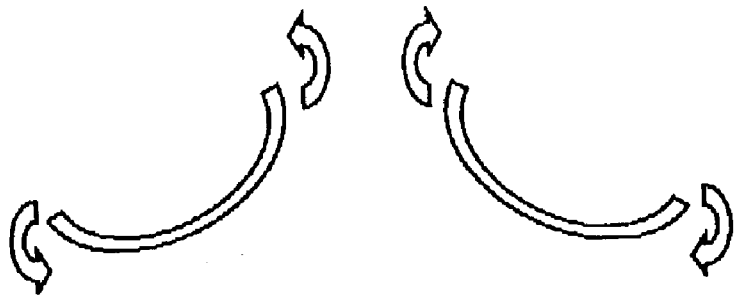
FIG.65