FIG.66A

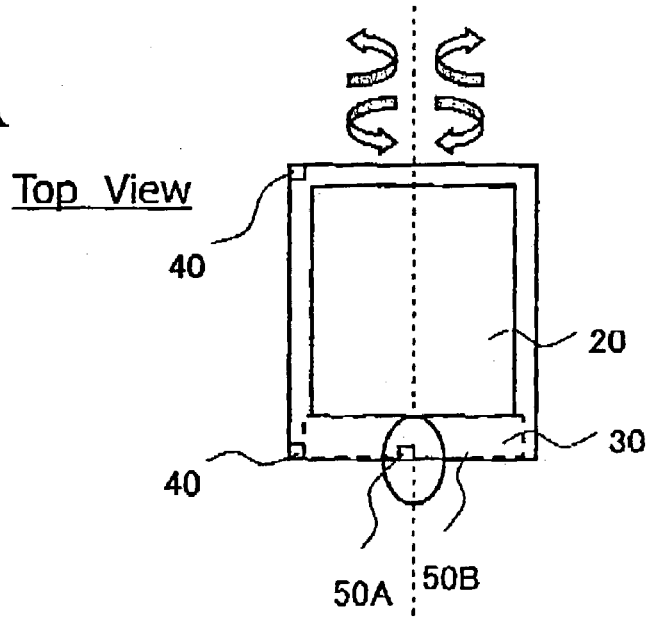

FIG.66B
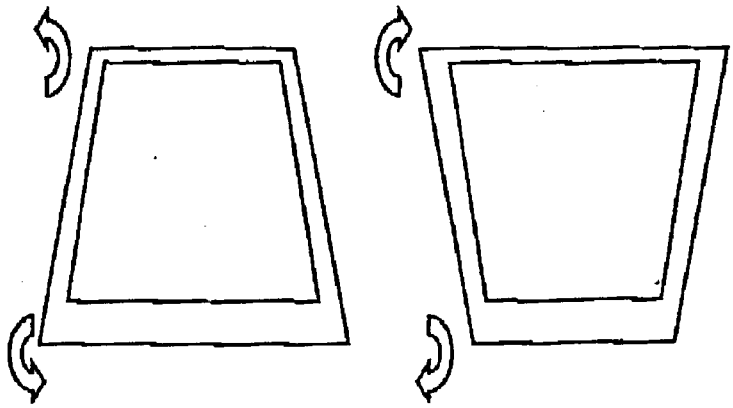
FIG.67