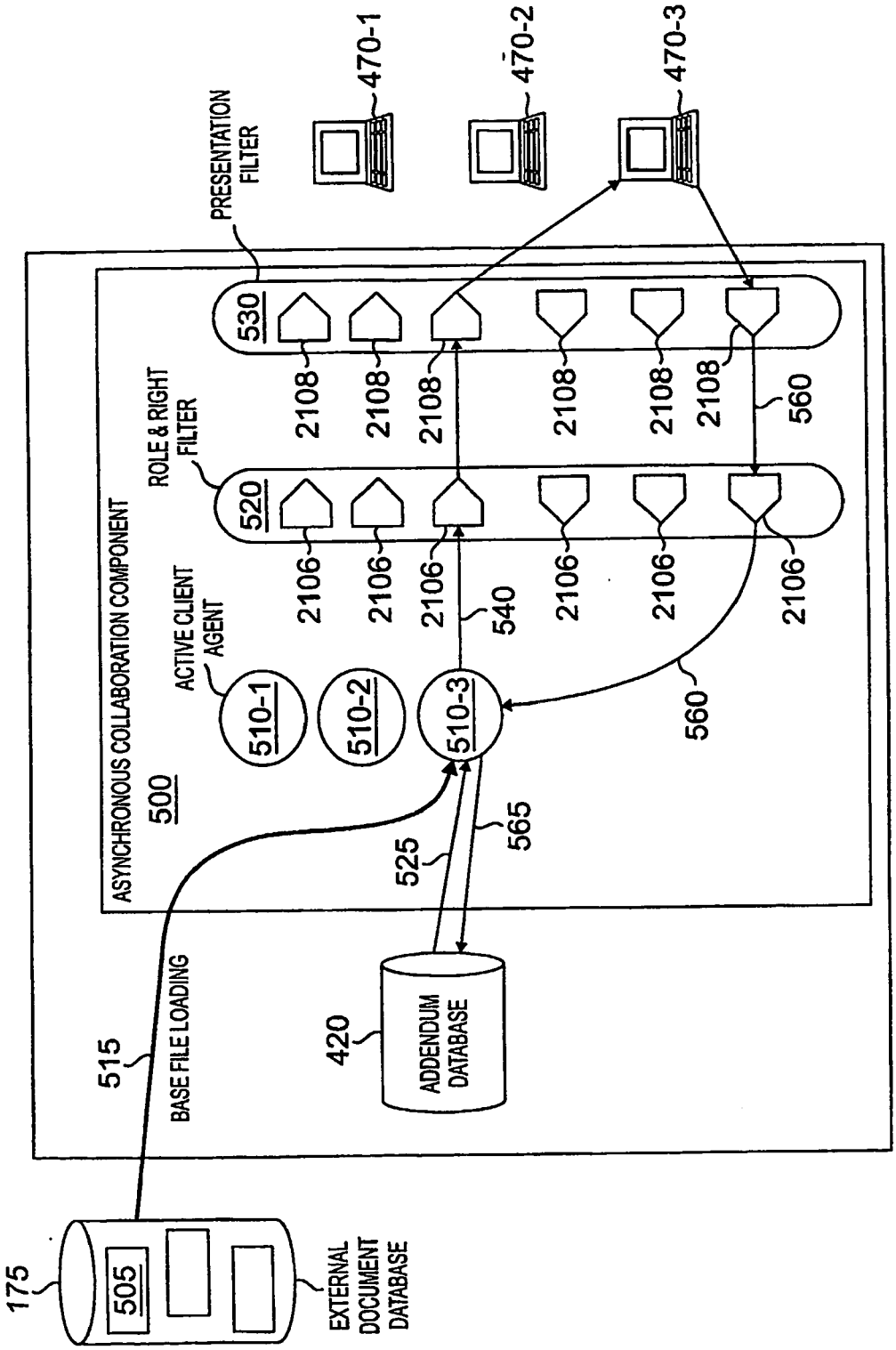
470-1
470-2
470-3
PRESENTATION FILTER
530
2108
2108
2108
2108
2108
2108
560
ROLE & RIGHT FILTER
520
2106
2106
2106
2106
2106
2106
540
ACTIVE CLIENT AGENT
510-1
510-2
510-3
560
ASYNCHRONOUS COLLABORATION COMPONENT
500
525
565
420
ADDENDUM DATABASE
515
BASE FILE LOADING
175
505
EXTERNAL DOCUMENT DATABASE

FIG. 5