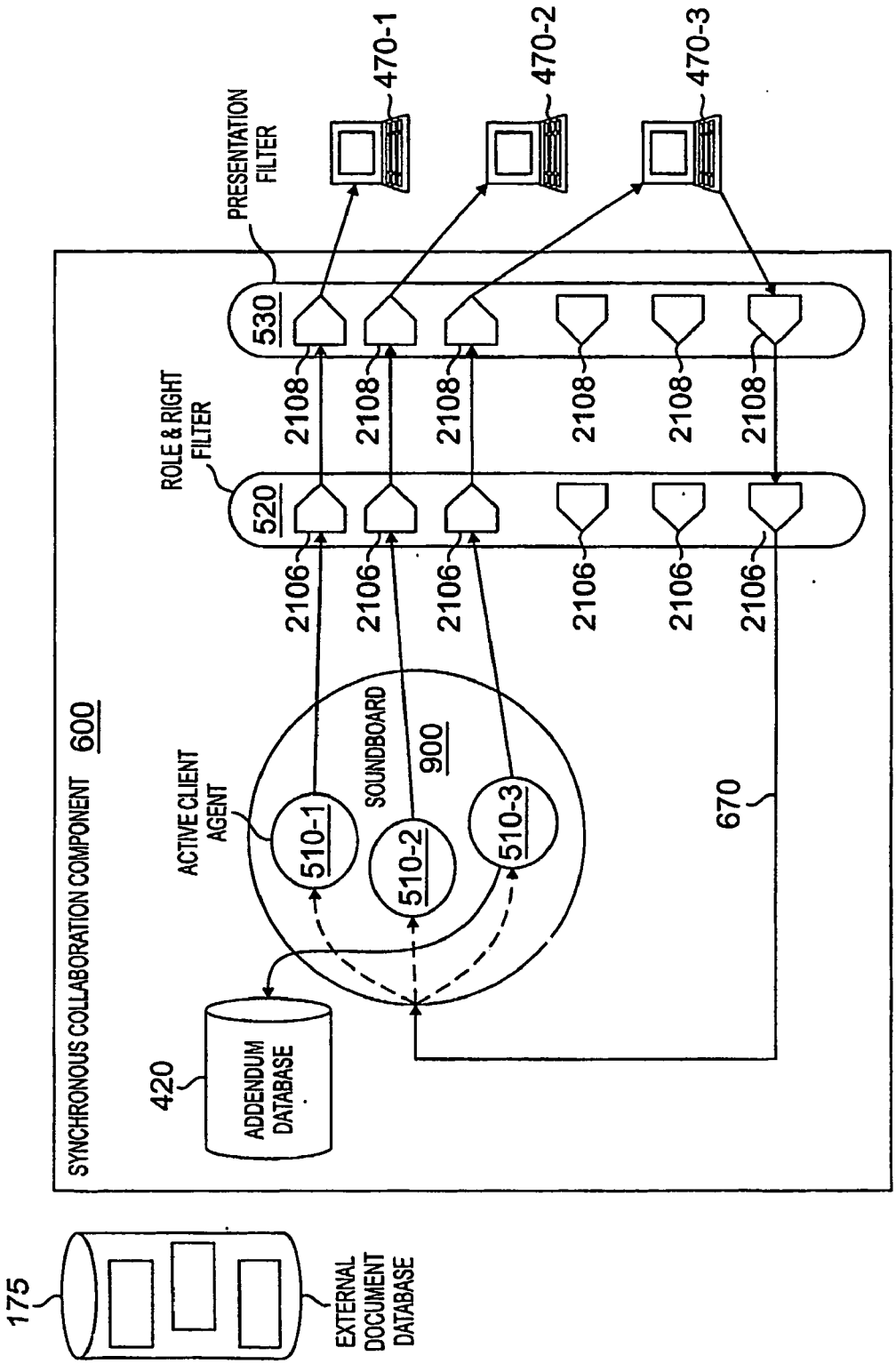
SYNCHRONOUS COLLABORATION COMPONENT 600
ACTIVE CLIENT AGENT
510-1
510-2
510-3
SOUNDBOARD
900
ADDENDUM DATABASE
420
ROLE & RIGHT FILTER
520
PRESENTATION FILTER
530
2106
2108
670
470-1
470-2
470-3
175
EXTERNAL DOCUMENT DATABASE

FIG. 6