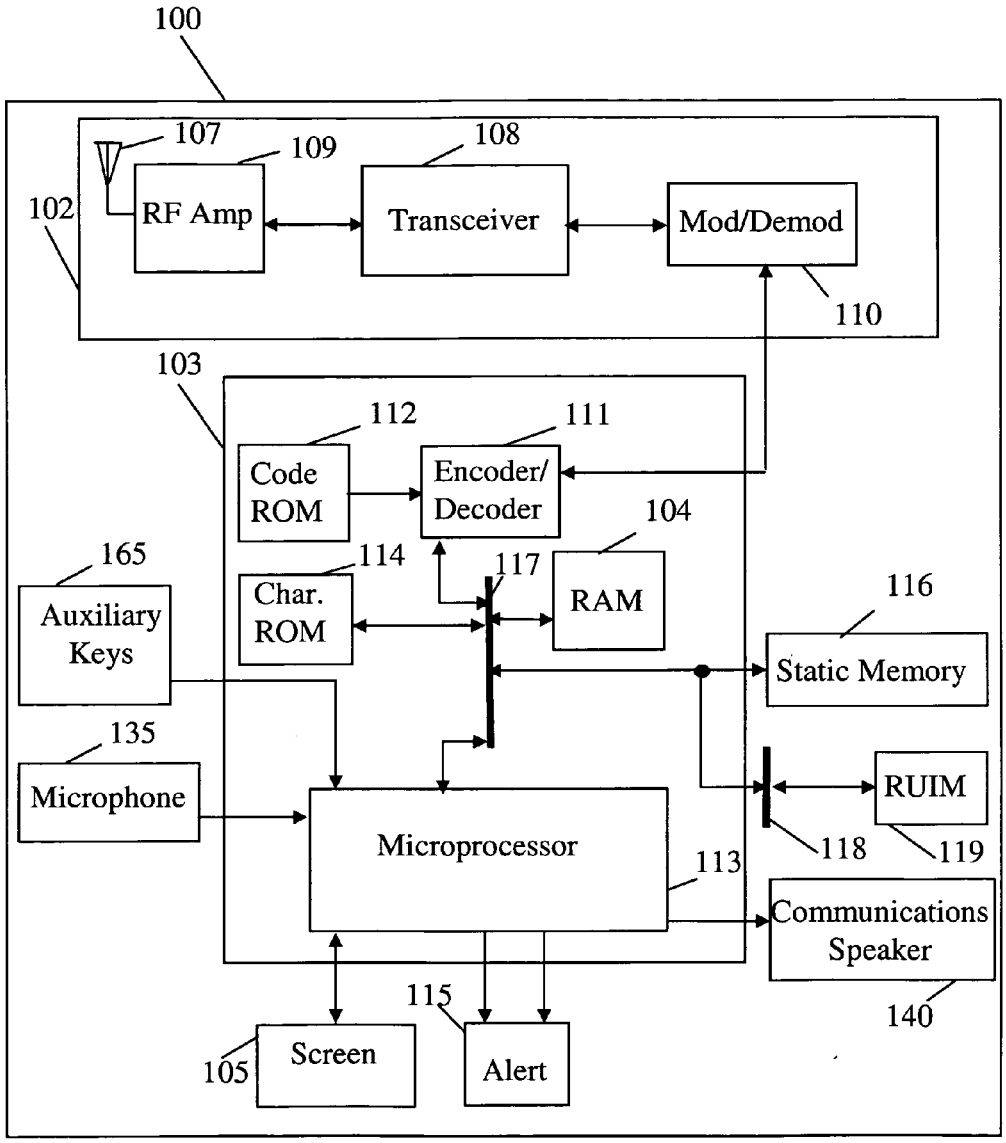
100
107
109
108
102
RF Amp
Transceiver
Mod/Demod
110
103
112
111
Code ROM
Encoder/ Decoder
104
165
114
117
Auxiliary Keys
Char. ROM
RAM
116
Static Memory
135
Microphone
Microprocessor
RUIM
118
119
113
Communications Speaker
115
140
105
Screen
Alert

FIG. 1