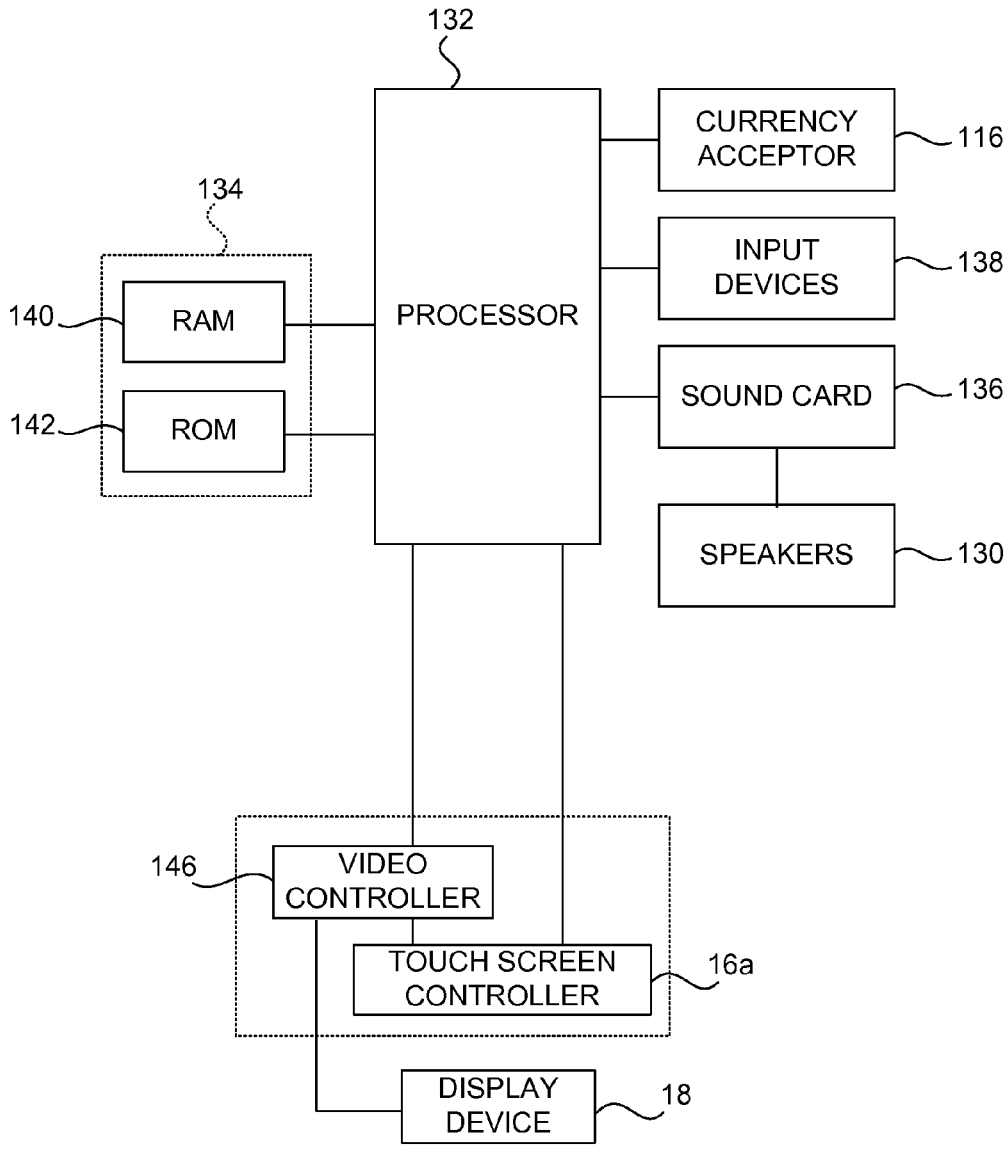
132
PROCESSOR
CURRENCY ACCEPTOR
116
134
INPUT DEVICES
138
140
RAM
SOUND CARD
136
142
ROM
SPEAKERS
130
146
VIDEO CONTROLLER
TOUCH SCREEN CONTROLLER
16a
DISPLAY DEVICE
18

FIG. 7