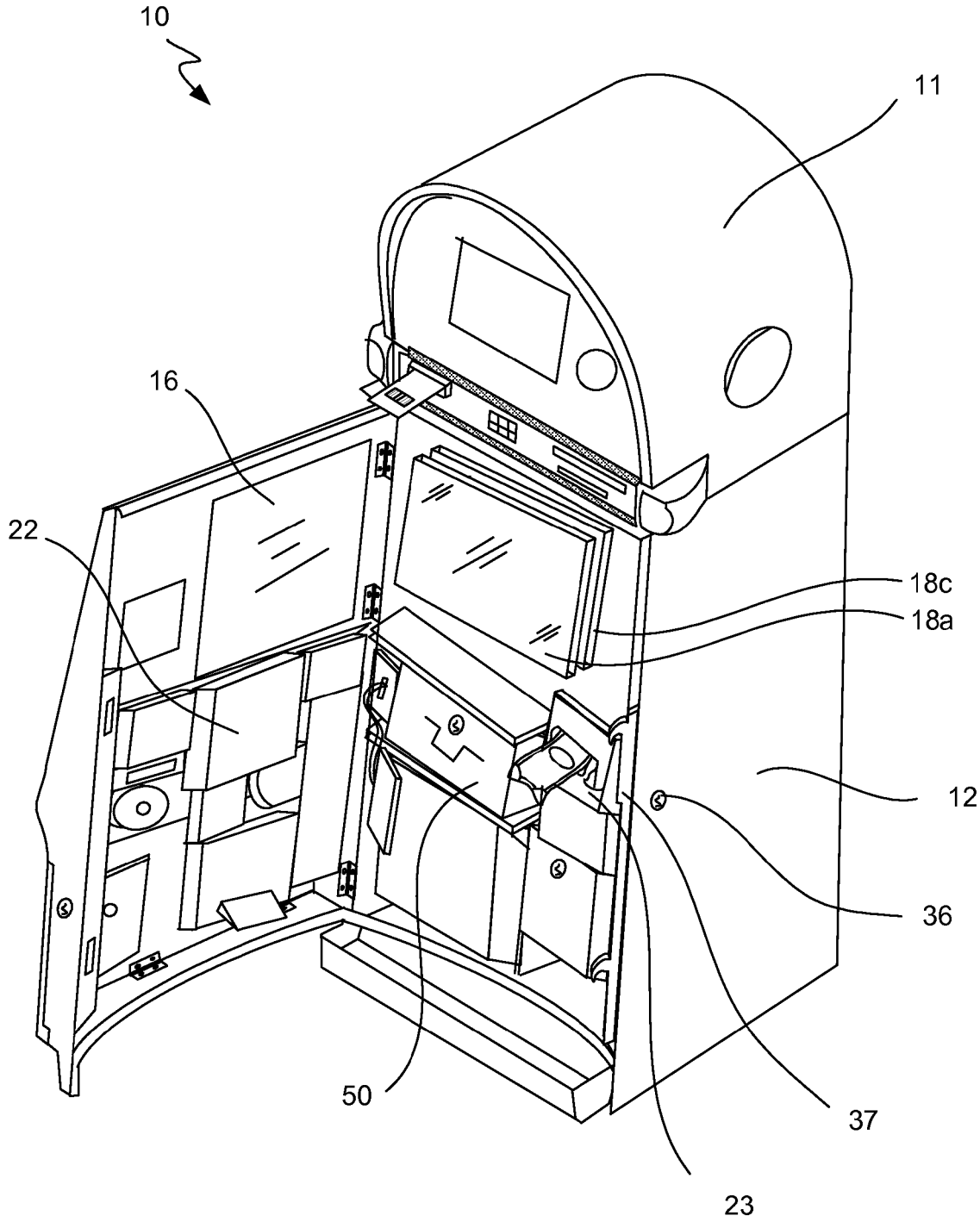

Figure 2B