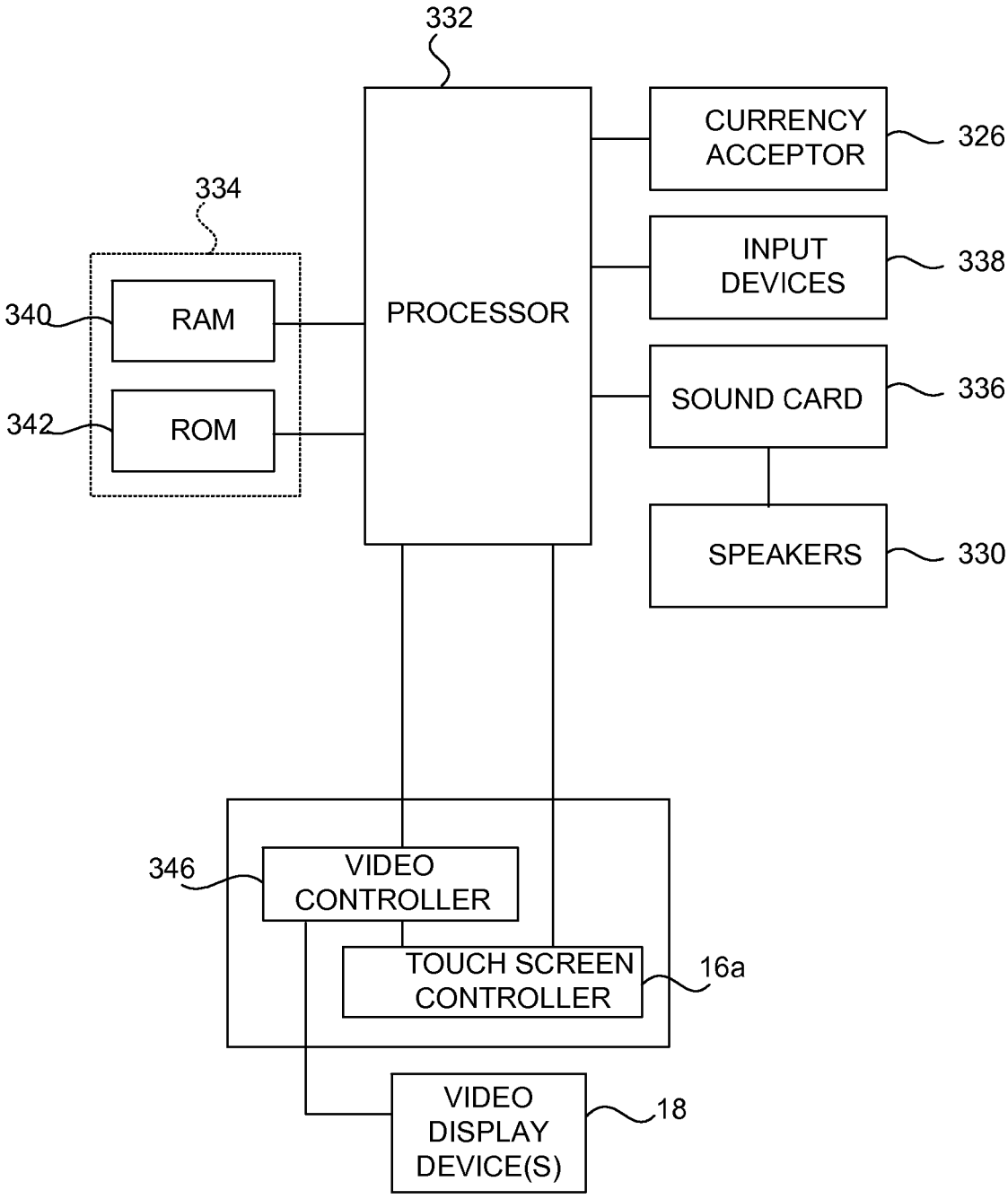
332
PROCESSOR
CURRENCY ACCEPTOR
326
334
INPUT DEVICES
338
340
RAM
342
ROM
SOUND CARD
336
SPEAKERS
330
346
VIDEO CONTROLLER
TOUCH SCREEN CONTROLLER
16a
VIDEO DISPLAY DEVICE(S)
18

Figure 2C