US 20150357741A1

(19) United States

(12) Patent Application Publication

Nazzaro et al.

(10) Pub. No.: US 2015/0357741 A1

(43) Pub. Date: Dec. 10, 2015

(54) ELECTRONIC DEVICE WITH HIDDEN CONNECTOR

(71) Applicant: **APPLE INC.**, Cupertino, CA (US)

(72) Inventors: **David I. Nazzaro**, Saratoga, CA (US); **Tyler S. Bushnell**, Mountain View, CA (US); **Ibuki Kamei**, San Jose, CA (US)

(21) Appl. No.: **14/299,921**

(22) Filed: **Jun. 9, 2014**

Publication Classification

(51) **Int. Cl.**

H01R 13/44 (2006.01)

H01R 13/46 (2006.01)

(52) **U.S. Cl.**

CPC *H01R 13/44* (2013.01); *H01R 13/46* (2013.01)

(57) **ABSTRACT**
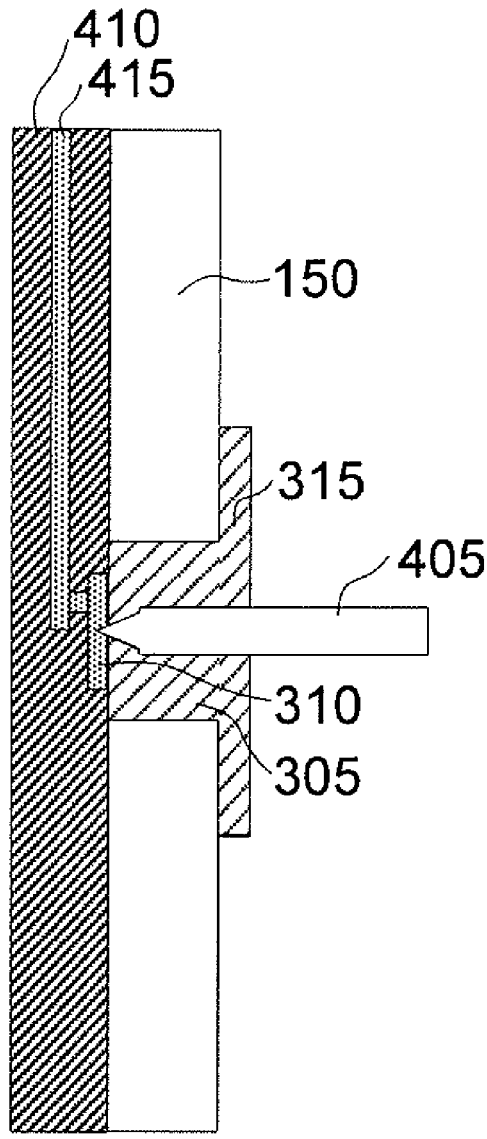
An electronic device has a self-healing elastomer applied over one or more external electronic connectors. The self-healing elastomer may obscure the electronic connectors from the user as well as provide environmental protection for the connector and the electronic device. Electronic probes may temporarily penetrate the self-healing elastomer to mate with the electronic connector. After removal of the probes the self-healing elastomer may elastically reform and self-heal.