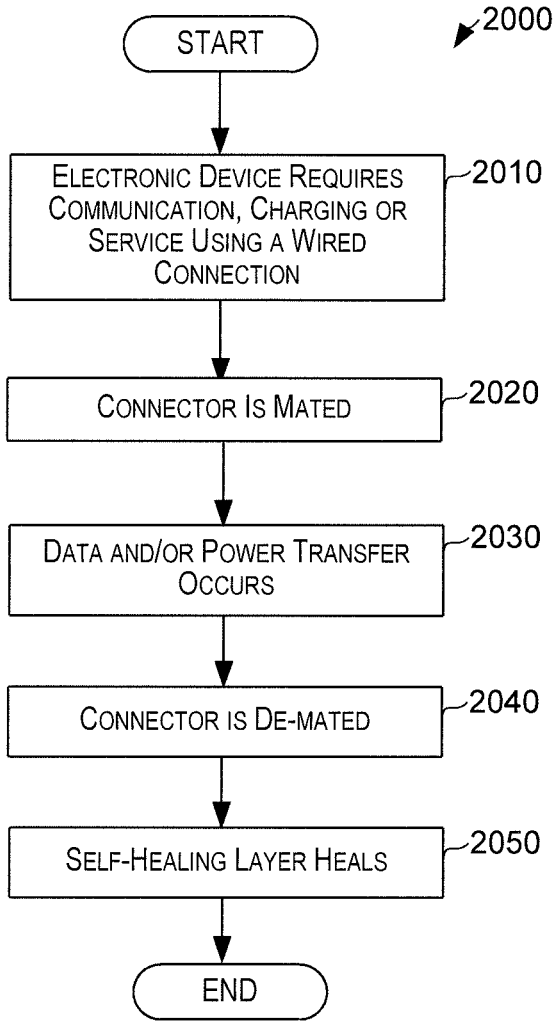
2000
START
ELECTRONIC DEVICE REQUIRES COMMUNICATION, CHARGING OR SERVICE USING A WIRED CONNECTION
2010
CONNECTOR IS MATED
2020
DATA AND/OR POWER TRANSFER OCCURS
2030
CONNECTOR IS DE-MATED
2040
SELF-HEALING LAYER HEALS
2050
END

FIG. 20