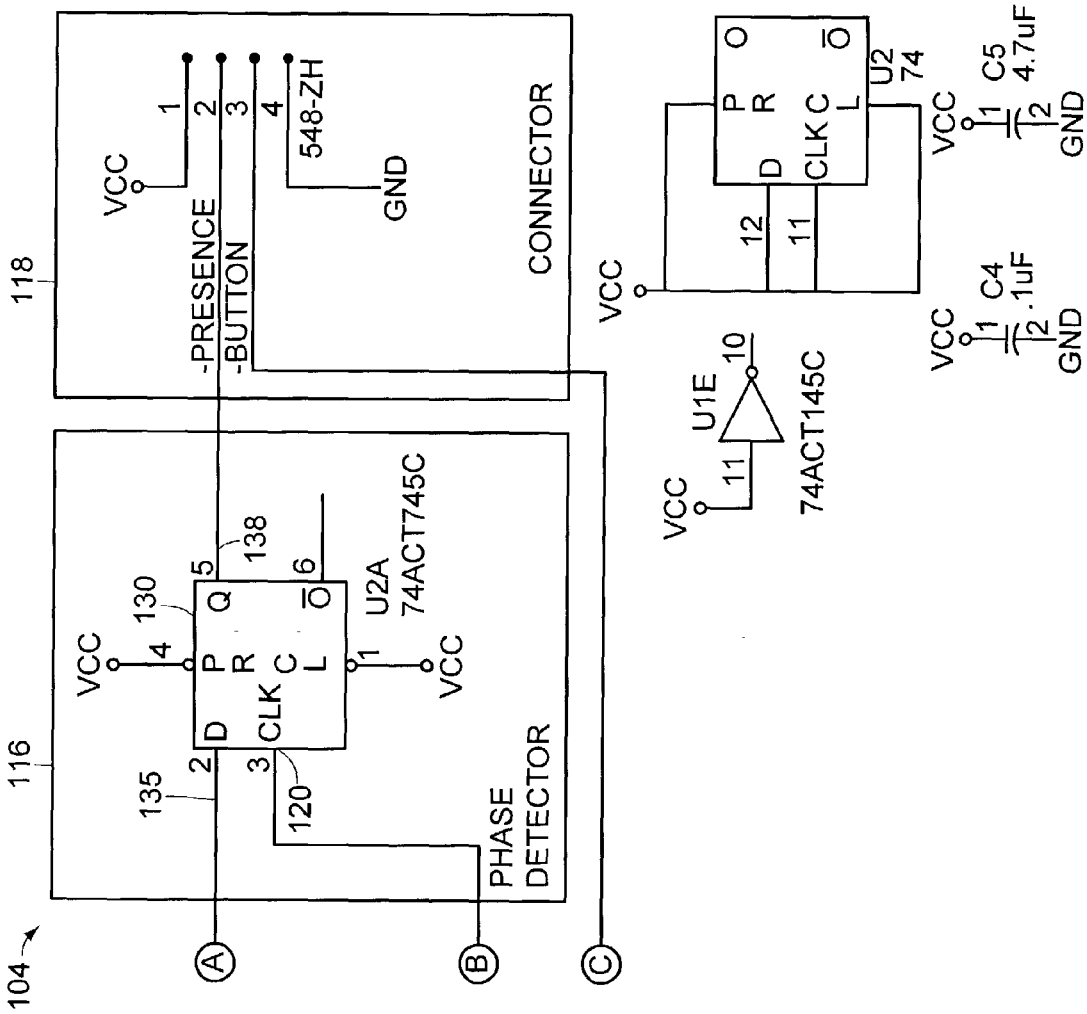
104
116
118
PHASE DETECTOR
CONNECTOR
VCC
-PRESENCE
-BUTTON
548-ZH
GND
U2A
74ACT745C
130
138
135
120
U1E
74ACT145C
U2
74
C4
.1uF
C5
4.7uF
A
B
C

FIG. 7B