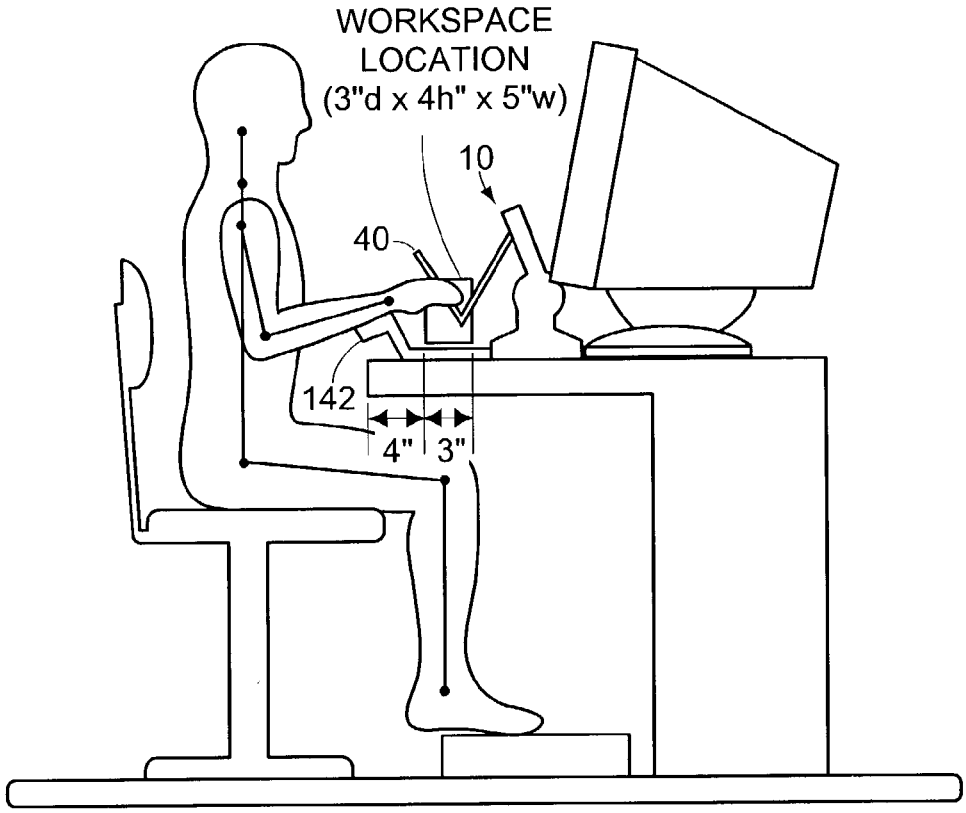
WORKSPACE
LOCATION
(3"d x 4h" x 5"w)
10
40
142
4"
3"

FIG. 8A

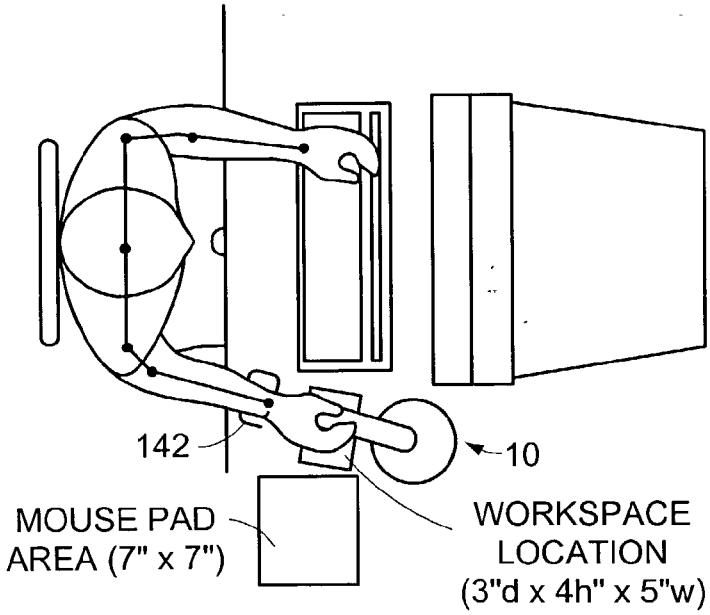
142
10
MOUSE PAD
AREA (7" x 7")
WORKSPACE
LOCATION
(3"d x 4h" x 5"w)

FIG. 8B