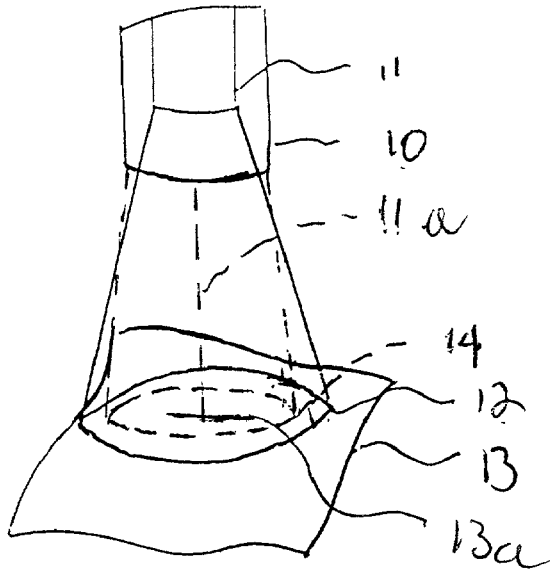

Fig. 1
(Prior Art)

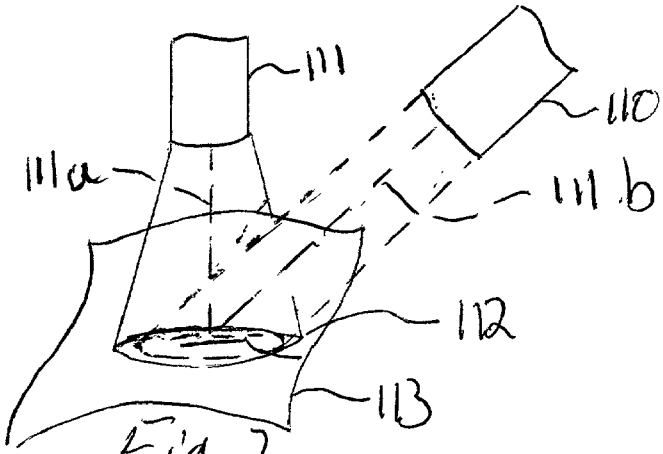

Fig. 2
(Prior Art)